FUJITSU

DL2700 PRO/2900 PRO/3600 PRO

24-wire dot matrix printers

USER'S MANUAL

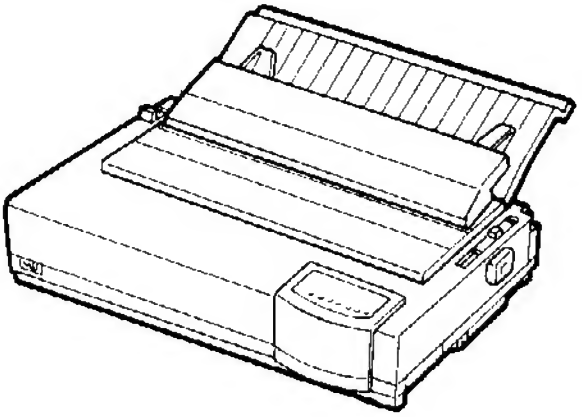

Federal Communications Commission Radio Frequency Interference Statement for United States Users

NOTE: This equipment has been tested and found to comply with the limits for a Class B digital device, pursuant to Part 15B of the FCC Rules. These limits are designed to provide reasonable protection against harmful interference in a residential installation. This equipment generates, uses, and can radiate radio frequency energy and, if not installed and used in accordance with the instructions, may cause harmful interference to radio communications. However, there is no guarantee that interference will not occur in a particular installation. If this equipment does cause harmful interference to radio or television reception, which can be determined by turning the equipment off and on, the user is encouraged to try to correct the interference by one or more of the following measure:

- Reorient or relocate the receiving antenna.
- Increase the separation between the equipment and receiver.
- Connect the equipment into an outlet on a circuit different from that to which the receiver is connected.
- Consult the dealer or an experienced radio/TV technician for help.

FCC warning: Changes or modifications not expressly approved by the party responsible for compliance could void the user's authority to operate the equipment.

NOTES

1. Testing of this equipment was performed on model number M33051A or M33061A.
2.. The use of a nonshielded interface cable with the referenced device is prohibited. The length of the parallel interface cable must be 3 meters (10 feet) or less. The length of the optional serial interface cable must be 15 meters (50 feet) or less.
3. The length of the power cord must be 3 meters (10 feet) or less.

Notice for Canadian Users

This class B digital apparatus meets all requirements of the Canadian Interference-Causing Equipment Regulations.

Cet appareil numérique de la Classe B respecte toutes les exigences du Règlement sur le matériel brouilleur du Canada.

Notice for German Users

Bescheinigung des Herstellers/Importeurs

Hiermit wird bescheinigt, daß der/die/das

- M33051B/M33061B

in Übereinstimmung mit den Bestimmungen der

- "CE"

funk-entstört ist.
Der Deutschen Bundesport wurde das inverkehrbringen dieses Gerätes angezeigt und die Berechtigung zur Überprüfung der Serie auf Einhaltung der Bestimmungen eingeräumt.

- Maschinenlärminformationsverordnung 3. GSGV, 18.01.1991:

Der höchste Schalldruckpegel beträgt 70 dB (A) oder weniger gemäß EN 27779-1991.

Energy Saving

As an ENERGY STAR® Partner, FUJITSU LIMITED has determined that this product meets the ENERGY STAR® guidelines for energy efficiency.

The International ENERGY STAR® Office Equipment Program is an international program that promotes energy saving through the use of computers and other office equipments. The program backs the development and dissemination of products with functions that effectively reduce energy consumption. It is an open system in which business proprietors can participate voluntarily. The targeted products are office equipment such as computers, displays, printers, facsimiles, and copiers. Their standards and logos are uniform among participating nations.

The contents of this manual may be revised without prior notice and without obligation to incorporate changes and improvements into units already shipped.

Every effort has been made to ensure that the information included here is complete and accurate at the time of publication; however, Fujitsu cannot be held responsible for errors and omissions.

Printer model specifications differ with the print column (80 or 136) and the power supply input voltage (100-120 or 220-240 VAC).

C147-E042-01EN April 1998

Copyright © 1998 FUJITSU LIMITED

Printed in Japan. All rights reserved. No part of this manual may be reproduced or translated, stored in a database or retrieval system, or transmitted, in any form or by any means, electronic, mechanical, photocopying, recording, or otherwise, without the prior written permission of Fujitsu Limited.

TRADEMARK ACKNOWLEDGMENT

FUJITSU is a registered trademark and Fujitsu Creative Faces is a trademark of Fujitsu Limited. Centronics is a trademark of Centronics Data Computer Coporation. IBM PC and IBM Proprinter XL24E are trademarks of International Business Machines Corporation. ESC/P2 is a trademark of Seiko Epson Corporation. Microsoft is a registered trademark and MS-DOS and Windows are trademarks of Microsoft Corporation. Nimbus Sans is a registered trademark of URW Unternehmensberatung Karow Rubow Weber GmbH, Hamburg.

Other product names mentioned in this manual may also be trademarks of their respective companies.

ABOUT THIS MANUAL

Thank you for buying the Fujitsu DL3700 Pro/3800 Pro dot matrix printer. You can expect years of reliable service with very little maintenance. This manual explains how to use your printer to full advantage. It is written for both new and experienced printer users.

This manual describes how to install, set up, and use your printer and printer options. It also explains how to keep the printer in good working condition and what to do should something go wrong. Detailed procedures are provided for first-time users. Experienced users can skip some of the details, using the table of contents and chapter introductions to locate information.

This manual has several appendixes, a glossary, and an index. Appendix A lists supplies and additional documentation and information available from your dealer or authorized Fujitsu representative. Fujitsu offices are listed at the end of the manual.

PRINTER MODELS AND OPTIONS

This manual covers model DL3700 Pro, an 80-column printer, and model DL3800 Pro, a 136-column printer. Each model has a 100-120 VAC or 220-240 VAC power supply. A serial interface is a factory add-on option. You must specify these when purchasing the printer. Other options include a cut sheet feeder and a color print feature, both of which can be added by yourself after purchasing the printer.

Unless otherwise stated, the information given here applies to both models. However, illustrations are of either model.

DL3700 Pro/3800 Pro

- Basic specifications
  - Print line at 10 cpi: 80 columns (DL3700 Pro)
    136 columns (DL3800 Pro)
  - Interface: Centronics parallel
- Alternative specification
  - Power supply: 100–120 VAC or 220–240 VAC
- Factory add-on option
  - RS-232C serial interface
- User add-on options
  - Cut sheet feeder
  - Color printing feature

cpi: characters per inch

ORGANIZATION

This manual is organized as follows:

Quick Reference summarizes everyday printer operations. After you become familiar with the printer, use this section as a memory aid.

Chapter 1, Introduction, introduces the printer and identifies key features and options that enhance the printer's capabilities.

Chapter 2, Setting Up, gives step-by-step procedures for setting up the printer for immediate use and identifies the main parts of the printer. If this is your first printer, you should read the entire chapter before attempting to use the printer.

Chapter 3, Paper Handling, explains how to load and use paper with your printer.

Chapter 4, Printing, covers basic printing operations. This chapter describes everyday operations from the printer's control panel, such as loading paper and selecting print features, in detail. After you become more familiar with the printer, use **Quick Reference** at the beginning of the manual to refresh your memory as needed.

Chapter 5, Using Setup Mode, describes how to change the printer's optional settings, such as print features, hardware options, and top-of-form. Most settings only affect print features such as the typestyle and page format. Note that certain settings directly affect hardware and software compatibility. Refer to this chapter as indicated in Chapter 2 or as required.

Chapter 6, Maintenance, explains basic maintenance procedures for this printer.

Chapter 7, Trouble-Shooting, describes problem-solving techniques. Before you contact your dealer for help, check the list of problems and solutions provided in this chapter.

Chapter 8, Installing Options, describes the options available for the printer and explains how to install them.

At the end of this manual, you will find several appendixes, a glossary, and an index. Appendix A gives order numbers for printer supplies, options, and publications. Other appendixes provide additional technical information about the printer.

CONVENTIONS

Special information, such as warnings, cautions, and notes, are indicated as follows:

WARNING
A WARNING indicates that personal injury may result if you do not follow a procedure correctly.

CAUTION
A CAUTION indicates that damage to the printer may result if you do not follow a procedure correctly.

NOTE
A NOTE provides "how-to" tips or suggestions to help you perform a procedure correctly. NOTEs are particularly useful for first-time users.

For Experienced Users:
If you are familiar with this printer or with dot matrix printers in general, this information will help you use the manual effectively.

TABLE OF CONTENTS

Quick Reference QR-1

CHAPTER 1 INTRODUCTION

Features 1-1
Option 1-3

CHAPTER 2 SETTING UP

Selecting a Good Location 2-1
Unpacking the Printer 2-3
  Checking Options and Supplies 2-5
Assembling the Printer 2-6
  Installing the Cut Sheet Stand 2-6
  Installing the Ribbon Cartridge 2-7
Getting Acquainted With Your Printer 2-10
Connecting the Power Cord 2-11
Testing the Printer (Offline) 2-13
  Loading Paper for the Self-Test 2-13
  Printing the Self-Test 2-14
Connecting the Printer to Your Computer 2-19
  Selecting a Parallel Interface Cable 2-19
  Selecting a Serial Interface Cable 2-19
  Connecting the Interface Cable 2-20
Selecting an Emulation 2-21
Printing a Sample Page (Online) 2-25

CHAPTER 3 PAPER HANDLING

Selecting Paper 3-1
Overview of Paper Operations 3-2
Adjusting for Paper Thickness 3-4
Using Single Sheets 3-5
  Loading a Single Sheet of Paper 3-5
  Loading Paper in the Cut Sheet Feeder (Option) 3-8
  Ejecting Single Sheets 3-12

Using Continuous Forms 3-12
Positioning the Paper Stack 3-13
Loading Continuous Forms (Push Tractor and Rear Feed) 3-14
Loading Continuous Forms (Pull Tractor and Bottom Feed) 3-17
Unloading Continuous Forms 3-22
Tearing Off Continuous Forms 3-22
Feeding and Positioning Paper 3-23
Line Feed/Form Feed 3-23
Micro Feed 3-24
Load Position Adjust 3-24
Switching Paper Types 3-24
Switching to Single Sheets 3-25
Switching to Continuous Forms 3-26
Tips on Paper Handling 3-26
General Tips 3-26
Multipart Forms 3-26
Envelopes 3-27
Labels 3-27

CHAPTER 4 PRINTING

Selecting Print Features 4-1
Using Commercial Software 4-2
Using the Control Panel 4-2
Selecting MENU1 or MENU2 4-3
Changing the menu font to a resident font 4-5
Locking the selected resident font 4-6
Starting or Stopping Printing 4-6
Starting Printing 4-6
Stopping Printing 4-6
Resuming from a Paper-Out 4-7
Resuming from an Area Over 4-8
Removing Printed Pages 4-9
Removing Single Sheets 4-9
Removing Continuous Forms 4-9
Clearing the Print Buffer 4-10

CHAPTER 5 USING SETUP MODE

How to Use This Chapter 5-1
Entering Setup Mode 5-2
Overview of Setup Mode 5-4
  Setup Mode Example 5-6
  Points to Remember 5-9
Printing a List of Selected Options 5-10
Deciding Which Options to Change 5-12
Changing MENU1 and MENU2 Options 5-14
  Procedure 5-27
  Resetting MENU1 and MENU2 5-28
Changing Hardware Options 5-29
  Procedure 5-33
Changing Print Position Adjustment Options 5-34
  Procedure 5-37
Changing Configuration Options 5-38
  Procedure 5-42
Exiting and Saving 5-43
  Procedure 5-44
Resetting Defaults 5-45
  Resetting Power-On Defaults 5-45
  Resetting Factory Defaults 5-45
  Resetting Factory Defaults in MENU1 and MENU2 5-45
Using the Diagnostic Functions 5-46
  Printing the Self-Test 5-47
    Procedure 5-47
  Printing Hex Dumps 5-48
    Procedure 5-49
  Checking Vertical Print Alignment (V-ALMNT) 5-51
    Procedure 5-51
Setup Mode Reference 5-53
  DPL24C PLUS ORGANIZATION 5-54
  Differences in IBM Proprinter XL24E Emulation 5-56
  Differences in Epson ESC/P2 Emulation 5-57
Online Setup Mode 5-58

CHAPTER 6 MAINTENANCE

Cleaning 6-1
Cleaning and Vacuuming the Printer 6-1
Cleaning the Platen and Paper Bail Rollers 6-3
Replacing the Ribbon 6-3
Replacing the Print Head 6-7

CHAPTER 7 TROUBLE-SHOOTING

Solving Problems 7-1
Print Quality Problems 7-1
Paper Handling Problems 7-4
Tips for clearing a jammed sheet from the printer 7-6
Common cause of abnormal paper feeding 7-7
Operating Problems 7-8
Printer Failures 7-10
Diagnostic functions 7-11
Getting Help 7-11

CHAPTER 8 INSTALLING OPTIONS

Installing the Cut Sheet Feeder 8-1
Installing the Color Kit 8-2

APPENDIX A SUPPLIES AND OPTIONS

Supplies A-1
Options A-1

APPENDIX B PRINTER AND PAPER SPECIFICATIONS

Physical Specifications B-1
Functional Specifications B-2
Performance Specifications B-4
Paper Specifications B-6
Print Area B-6
Paper Thickness B-8

APPENDIX C COMMAND SETS

Fujitsu DPL24C PLUS C-2
Factory Default Settings C-14
IBM Proprinter XL24E Emulation C-17
Epson ESC/P2 Emulation C-22

APPENDIX D INTERFACE INFORMATION

Parallel Interface D-1
Compatible Mode D-2
Nibble Mode D-4
Data Transmission Timing D-6
Serial Interface D-7
Serial Options D-8
Cable Wiring D-8
Serial Protocols D-10

APPENDIX E CHARACTER SETS

Character Sets 1 and 2 (DPL24C PLUS and IBM XL24E Emulation) E-1
Italic and Graphics Character Sets (ESC/P2 Emulation) E-2
National Character Sets (All Emulations) E-4
National Character Sets (DPL24C PLUS and IBM XL24E Emulation) E-14
National Character Sets (ESC/P2 Emulation) E-15
National Character Sets and Supported Resident Fonts (All Emulations) E-18

APPENDIX F RESIDENT FONTS F-1

GLOSSARY OF TERMS GL-1

INDEX IN-1

QUICK REFERENCE

Quick Reference is written for experienced users — users who are familiar with how the printer works, but who may need to refresh their memory occasionally. *Only the printer's normal (non-setup) mode is covered.* For details on setup mode, see Chapter 5.

Normal mode operation includes everyday operations, such as paper handling and font selection. The printer comes up in normal mode when turned on. To enter setup mode, press the FONT and MENU buttons at the same time while the ONLINE indicator is off (not lit).

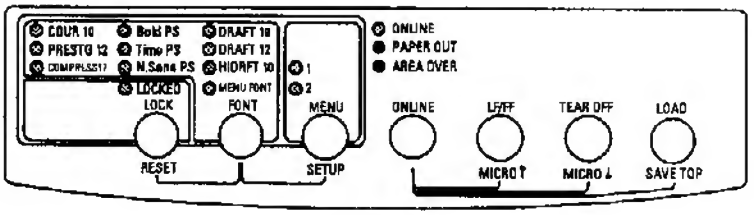

Control panel

The table on the next page lists normal mode opeprations with online and offline conditions and gives the required user response. Operations are listed alphabetically.

Printer Operations (Normal Mode)

√ : Operation can be performed when the printer is in this state.
— : Operation cannot be performed when the printer is in this state.
N/A : Does not apply.

Operation	Online	Offline	Required Response
Clear print buffer	—	√	Press LOCK and FONT.
Eject single sheets	√	√	Press LF/FF.
Enter normal mode	N/A	N/A	Turn printer on. (Press I on the power switch.)
Enter setup mode	—	√	Press FONT and MENU.
Exit to normal mode	—	√	Press ONLINE, then press FONT or MENU.
Form feed (forward)	√	√	Press and hold LF/FF until the operation starts.
Ignore font commands from CPU	—	√	Press LOCK.
Line feed (forward)	√	√	Press LF/FF within three seconds.
Load paper	√	√	Press LOAD.
Micro feed (backward)	—	√	Press ONLINE and TEAR OFF.
Micro feed (forward)	—	√	Press ONLINE and LF/FF.
Place printer offline	√	—	Press ONLINE.
Place printer online	—	√	Press ONLINE.
Reset power-on defaults	√	√	Turn printer off, then on.
Resume printing after paper end	—	√	Press ONLINE.
Save adjusted load positions	—	√	Press ONLINE and LOAD.
Select a font (and pitch)	—	√	Press FONT.
Select MENU1 or MENU2	—	√	Press MENU.
Start/stop/resume printing	√	√	Start: Send print command. Stop/resume: Press ONLINE.
Self-test printing	√	√	Start: Turn printer off. Press LF/FF while turning printer on. Pause/resume: Press FONT or MENU. Exit: Press ONLINE.
Tear off forms (rear-fed continuous forms only)	√	√	Press TEAR OFF. Tear off forms, then press any button to retract forms.
Unload paper to park position (rear-fed continuous forms only)	√	√	Press LOAD.

1

Introduction

INTRODUCTION

Congratulations on purchasing this printer. This printer is a compact, versatile printer that offers maximum compatibility with today's software packages and personal computers.
The 24-wire print head provides crisp, clear printing for business, office, and home environments. This printer is also easy to install and use.

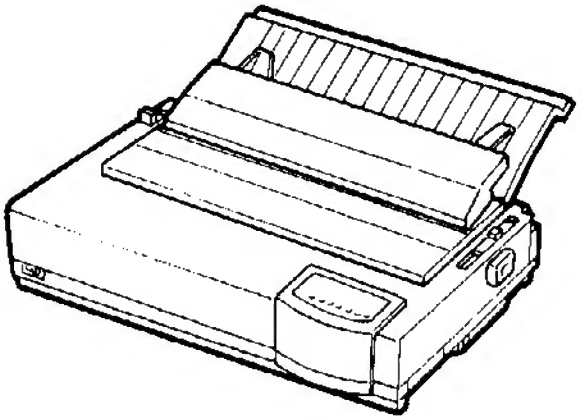

Dot matrix printer

FEATURES

Key printer features and options are listed in the next two sections.

- **Software compatibility.** This printer, which operates primarily with the Fujitsu DPL24C PLUS command set, is compatible with the IBM Proprinter XL24E command set and the Epson ESC/P2 command set.
- **Various character sets.** As basic character sets, IBM PC character sets 1 and 2 are available for the Fujitsu DPL24C PLUS command set and the IBM Proprinter XL24E emulation, and the italic character set and graphics character sets 1 and 2 are available for the Epson ESC/P2 emulation. As national character sets, a total of 56 or 61 national character sets (depending on the emulation), including IBM PS/2 character sets, are available.

- **Multiple fonts.** The printer has nineteen resident fonts: Ten bit-map fonts — Courier 10, Pica 10, Prestige Elite 12, Boldface PS, OCR-B 10, OCR-A 10, Correspondence, Compressed, Draft, and High-speed Draft and nine outline fonts — Timeless, Nimbus Sans, and Courier, each in upright, italic, and bold.

- **High-speed printing.** At 10 cpi, print speed ranges from 113 cps for letter quality to 360 cps for high-speed draft quality.

- **Large print buffer.** 128K bytes are available in total for storing input data and downloading fonts. A large input data buffer allows you to send files to the printer and return to work in your application. A large download buffer allows you to use custom fonts.

- **80-column or 136-column print line.** 80-column printers print in landscape mode using letter- or A4- size paper. 136-column printers print in landscape mode using legal- or standard-size computer forms.

- **Simple switching of paper types.** The ability to "park" continuous forms makes it easy to switch between continuous forms and single sheets. This switching is possible even for an optional cut sheet feeder.

- **Bottom feeding capability.** The tractor unit is removable and can be converted to push-feed or pull-feed. Installing the tractor unit on the platen allows the paper to be fed through the slot at the bottom of the printer.

- **Auto tearoff.** Continuous forms are fed automatically up to the tear-off position at the end of each job.

- **Maintenance-free.** The printer only requires periodic cleaning and changing of the ribbon cartridge.

OPTIONS

Printer add-on options are listed below. For details, see Chapter 8

- **Cut sheet feeder**
  The ASF100 single-bin feeder is available as an option for the 80-column printer, and the ASF300 single-bin feeder and double-bin adapter are available for the 136-column printer.
  A cut sheet feeder allows single sheets to be fed automatically.

- **Color kit.** You can turn your monochrome printer into a color printer. Seven-color printing using a color ribbon is possible if supported by your software.

The RS-232C serial interface is a factory-installable option that allows you to connect your printer to a serial port of your computer.

2

SETTING UP

Your new printer is easy to install and set up. This chapter tells you how to set up the printer and start printing right away. If this is your first printer, you should read the entire chapter before attempting to use the printer.

In this chapter, you will learn how to:

- Unpack, assemble, and select a good location for the printer
- Identify the printer's major parts
- Connect the power and interface cables
- Test the printer before connecting it to your computer
- Select an emulation and print a sample page using your software

If you have a problem while setting up the printer, review the section Solving Problems in Chapter 7. If the problem persists, contact your dealer.

SELECTING A GOOD LOCATION

This printer is suitable for most business, office, and home environments. To obtain peak performance from the printer, select a location that meets the following guidelines:

√ Place the printer on a sturdy, level surface.

√ Place the printer near a well-grounded AC power outlet.

√ Ensure easy access to the front and rear of the printer by leaving several inches of space around the printer. Do not block the air vents on the front, left, and right sides of the printer.

√ Do not place the printer in direct sunlight or near heaters.

√ Make sure that the room is well-ventilated and free from excessive dust.

√ Do not expose the printer to extremes of temperature and humidity.

√ Use only the power cord supplied with the printer or recommended by your dealer. Do not use an extension cord.

√ Do not plug the printer into a power outlet that is shared with heavy industrial equipment, such as motors, or appliances, such as copiers or coffee makers. Such equipment often emits electrical noise or causes power degradation.

UNPACKING THE PRINTER

Unpack the printer as follows:

1. Open the carton and remove the printer and its components. Make sure that you have all of the items shown below. Note that the power cord supplied depends on the printer model (100-120 or 220-240 VAC power supply).

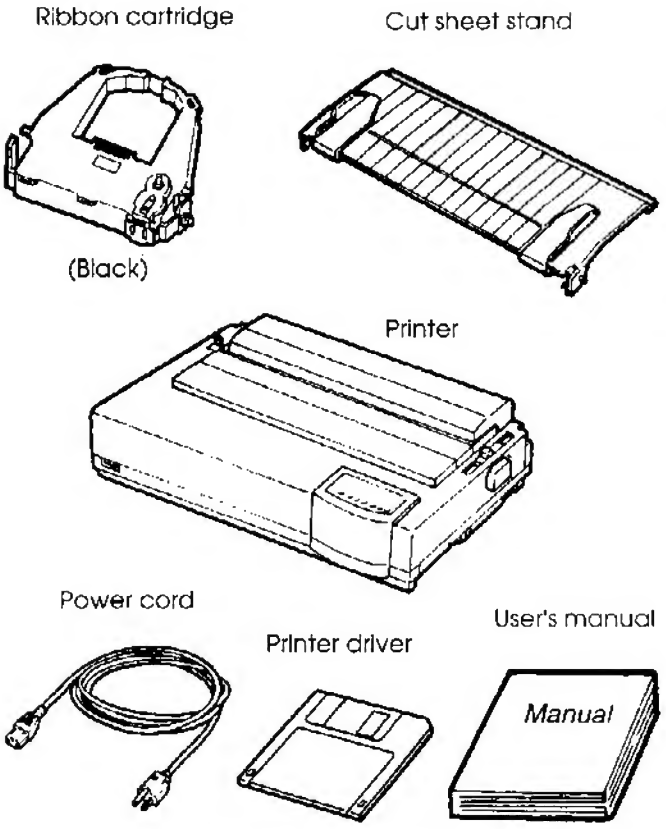

Checking items received

2. Carefully examine each item for damage. Report any problems to your dealer or shipping agent.

3. Place the printer where you plan to use it.

4. Remove the tapes securing the front cover, top cover, and back cover. Open the front cover and remove the shipping restraint cardboard that holds the print head carriage in place (shown below).

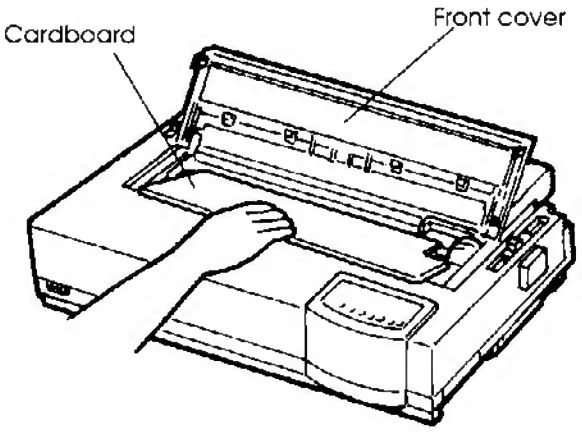

Removing the shipping restraint cardboard

5. Store the original shipping carton and packaging materials for future use. For example, the original packaging is ideal for use when you move or ship your printer to another location.

NOTE
The interface cable is not included with the printer. You must purchase it separately. Connection of the interface cable is described later in this chapter.

Checking Options and Supplies

The following options and supplies, if ordered, are shipped separately:

- Cut sheet feeder (option)
- Double-bin adapter (option)
- Color kit (option)
- Extra monochrome or color ribbon cartridges

The RS-232C serial interface is a factory-installable option. If you ordered the interface, the board is already installed in the printer.

Make sure that you received all the options you ordered. Installation of options is described in Chapter 8.

Once you are sure you have everything, you are ready to assemble the printer.

ASSEMBLING THE PRINTER

This section explains how to install the cut sheet stand and ribbon cartridge.

Installing the Cut Sheet Stand

The cut sheet stand enables smooth feeding of both single sheets and continuous forms. Install the cut sheet stand as described below:

1. Referring to the following figure, locate the two grooved notches on the top of the printer, behind the top cover. Note that each notch has a front groove and a rear groove.

2. Locate the two mounting pins on each side of the cut sheet stand.

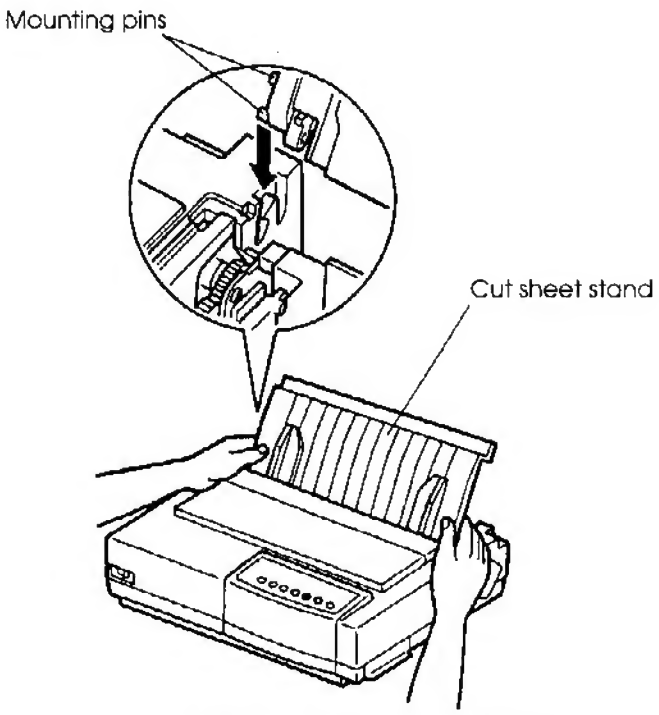

Installing the cut sheet stand

3. Hold the cut sheet stand at an angle over the top of the printer. Slide the mounting pins into the long, front grooves of the notches. This is the cut sheet stand's *up* position, used for printing single sheets.

   To rotate the cut sheet stand to its *down* position, grasp it at the sides and lift it up until the two upper mounting pins fall into the rear grooves of the notches. This position is used for printing most continuous forms.

Installing the Ribbon Cartridge

The basic printer uses a black ribbon cartridge. If you have a color kit option, you can use either color or black ribbon cartridges. To install the ribbon cartridge:

1. Open the front cover of the printer. For easy installation, slide the print head carriage so that it does not face a bail roller.

2. The paper thickness lever, located on the right of the printer, has nine positions. Before you install the ribbon cartridge, move this lever to **D**.

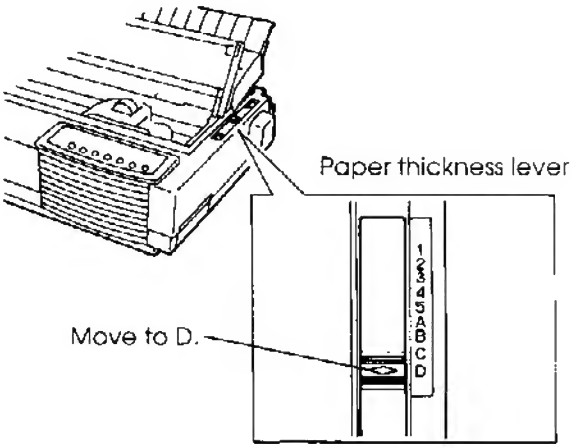

Preparing to install the ribbon

3. Remove the ribbon cartridge from its package. For a black ribbon cartridge, push in the two ribbon release tabs. The tabs snap into the cartridge and the ribbon feed mechanism engages.

   For a color ribbon cartridge (option), pull the ribbon release plate in the direction of the arrow and press the ribbon feed knob toward "FREE." The ribbon feed mechanism engages.

   Turn the ribbon feed knob clockwise to be sure that it feeds properly.

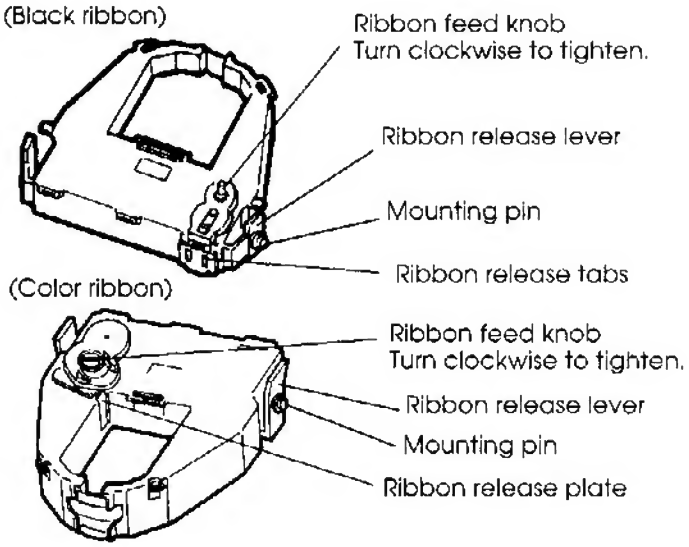

Preparing the ribbon cartridge

4. Locate the two ribbon release levers on either side of the ribbon cartridge. Each ribbon release lever has a mounting pin on the side. As shown below, place the mounting pins on the ribbon support bracket of the head carrier. Insert the ribbon so that the ribbon falls between the nose of the print head and the plastic print guide.

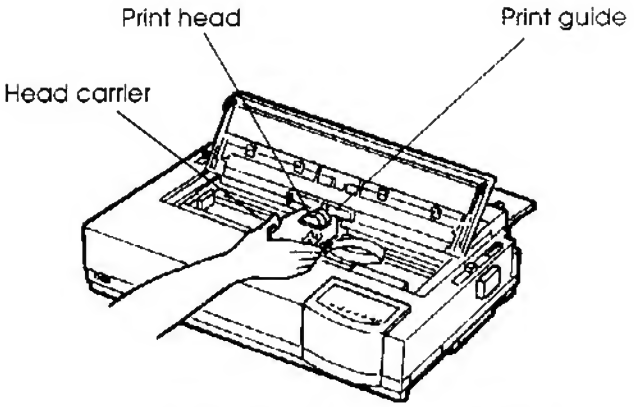

Installing the ribbon cartridge

5. Press the ribbon release levers inward until the mounting pins snap into the holes of the ribbon support brackets. Gently pull on the cartridge to be sure that the pins are secure in the holes.

6. Turn the ribbon feed knob clockwise to take up any slack in the ribbon.

7. Move the paper thickness lever back to position 1, which is the correct setting for printing most single sheets.

8. Close the front cover.

NOTE
A Fujitsu ribbon cassette is recommended. Dont't use other cassettes. If other cassettes are used, operating problems or damage of print head may be caused.

GETTING ACQUAINTED WITH YOUR PRINTER

Now that your printer is assembled, take a moment to become familiar with its major parts.

Looking at the printer from the front right side, you can see the parts of the printer shown in the figure below.

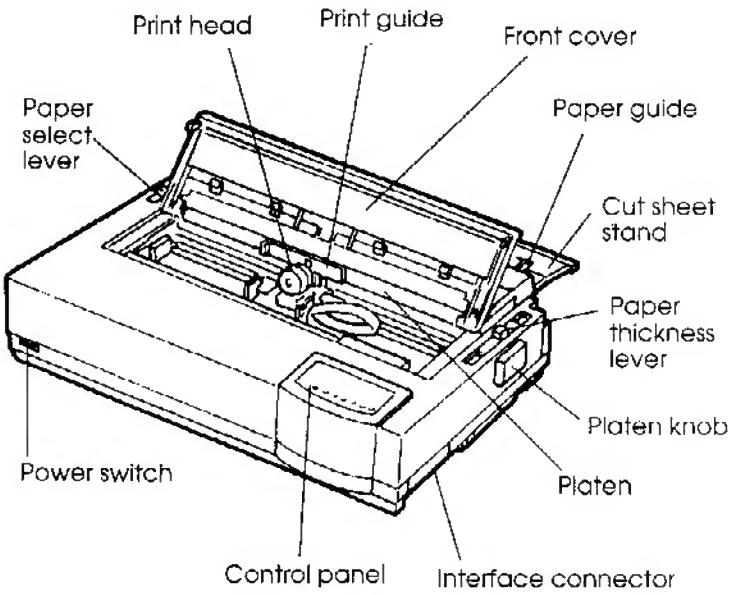

Printer components (front and right)

The printer control panel has the buttons and indicators used to load and feed paper (see Chapter 3) and select print features (see Chapter 4). The control panel also allows you to change the printer's optional settings (see Chapter 5).

Looking at the printer from the back with the cut sheet stand and back cover removed, you can see the following parts of the printer:

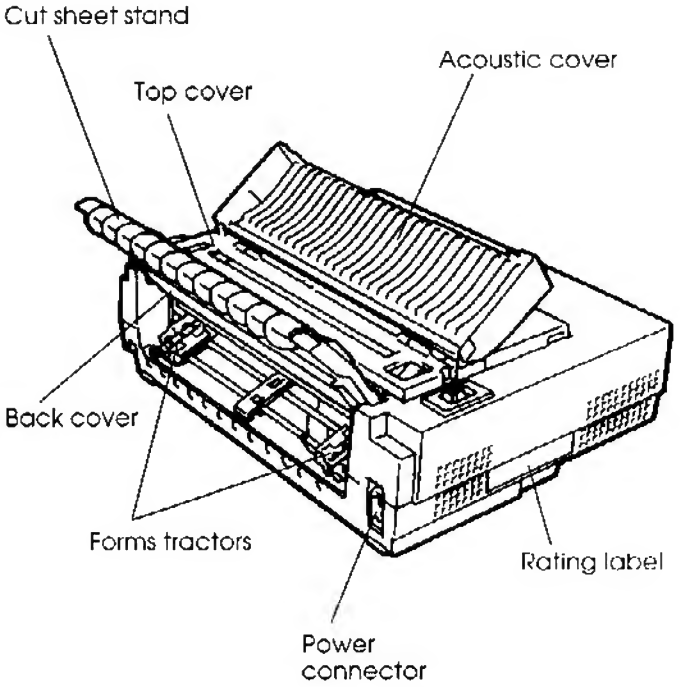

Printer components (rear)

CONNECTING THE POWER CORD

Before you plug in the printer:

√ Make sure that the printer power is switched off. The side marked "1" on the power switch should be raised.

√ Make sure that the power outlet is properly grounded.

√ Make sure that you use the power cord shipped with the printer. This cord is designed to minimize radio frequency interference.

To plug in the power cord:

1. Plug one end of the power cord into the power connector on the rear of the printer.

2. Plug the other end of the power cord into the power outlet.

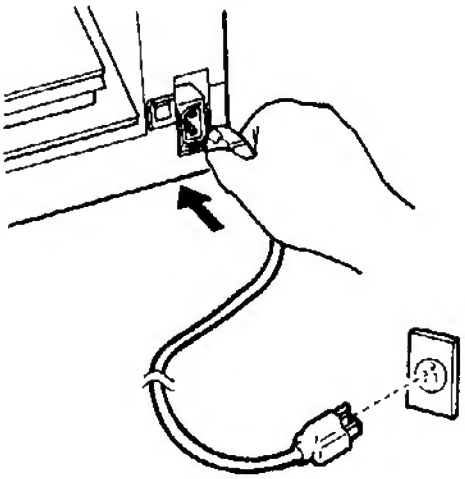

Connecting the power cord

3. Make sure that the power cord is securely connected.

4. Turn on the power by pressing the side marked "1" on the power switch. Within a few seconds, the MENU1 indicator on the printer control panel will light, the print head will move to its home position, and the ONLINE indicator will light (green).

NOTE
If no forms are loaded, the printer may beep and the red PAPER OUT indicator may light and the ONLINE indicator will not light if the paper select lever is set backward to the continuous forms position. Move the paper select lever forward to the single sheet position (as described in the next section). The PAPER OUT indicator will go out. This condition is a result of the factory default settings and poses no problem.

TESTING THE PRINTER (OFFLINE)

At this point, load paper and run the printer self-test. The self-test checks printer performance and print quality before you connect the printer to the computer. Use either single sheets or continuous forms (see Chapter 3). This section describes the self-test procedure using single sheets.

Loading Paper for the Self-Test

To print the self-test, use paper wider than 215.9 mm (8.5 inches) and set the left paper guide all the way to the right to avoid clipping the test pattern. Standard letter or A4 size paper can be used *lengthwise* (portrait mode).

Before loading paper, make sure that the printer is on. Then, proceed as follows:

1. Make sure that the paper thickness lever (located on the top right of the printer) is at position **1**. Make sure that the paper select lever (located on the top left of the printer) is set to the front, as shown below.

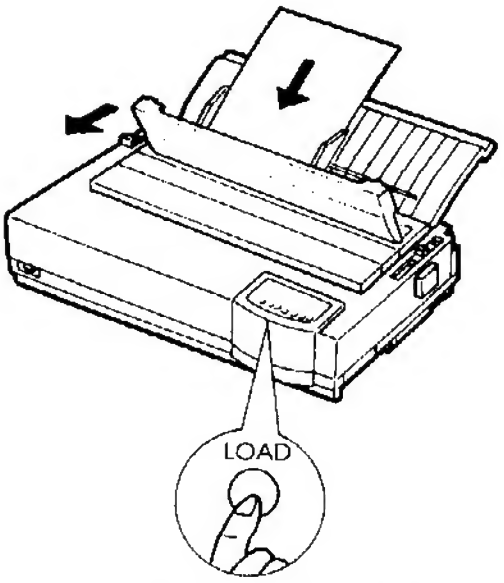

Loading a sheet of paper

2. Raise the cut sheet stand. Move the left paper guide all the way to the right. Insert the sheet of paper into the cut sheet stand. Letter or A4 size paper, inserted *lengthwise* (portrait mode) with this setting, will not result in clipping.

   Adjust the right paper guide so that the paper lies flat on the cut sheet stand.

3. Slide the paper along the cut sheet stand until its bottom edge touches the platen. Then press the LOAD button. The paper will be loaded to the top-of-form position.

Printing the Self-Test

The printer has a built-in self-test program. The self-test prints the firmware version, the names of the printer's resident emulations, and all of the characters available in the emulations. The self-test prints 80 characters per line. If you are using a color printer and ribbon, printing is in seven colors.

To print a self-test page, make sure that a sheet of paper is loaded. Then proceed as follows:

1. Turn the printer off.

2. While pressing the LF/FF button, turn the printer back on. Keep the LF/FF button pressed until the printer beeps. Self-test printing will start.

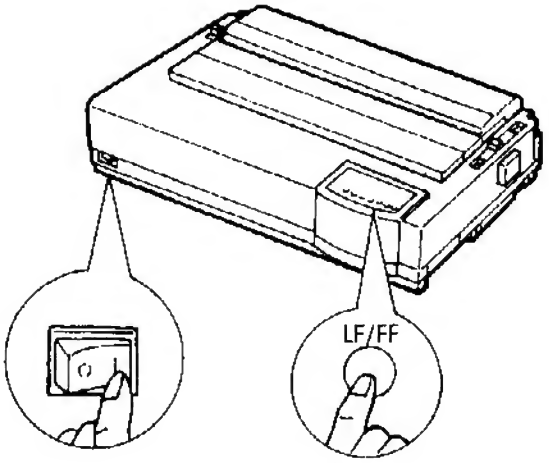

Starting the self-test

3. Allow printing to continue for a dozen or more lines of repeat printing. To stop printing, press the FONT button or the MENU button. Manually turn the platen knob clockwise to remove the test page.

NOTE
Do not try to use the LF/FF (line feed/form feed) button to eject the paper. In self-test mode, LF/FF cannot be used to feed paper forward.

4. Examine the self-test page. It should look like the sample on the next page.

   Check that printing is uniform and that there are no light, dark, or smudged areas. If the print quality is good, go to step 5 Otherwise, try to correct the problem as follows:

   - Make sure that the ribbon is installed correctly.
   - Make sure that the paper thickness lever is set to position 1.

- Insert a new sheet of paper into the cut sheet stand. Turn the platen knob to manually advance the paper until the top edge has moved past the paper bail rollers.

- Press the FONT button or the MENU button to restart printing. If the print quality remains poor, turn off the printer and contact your dealer for assistance.

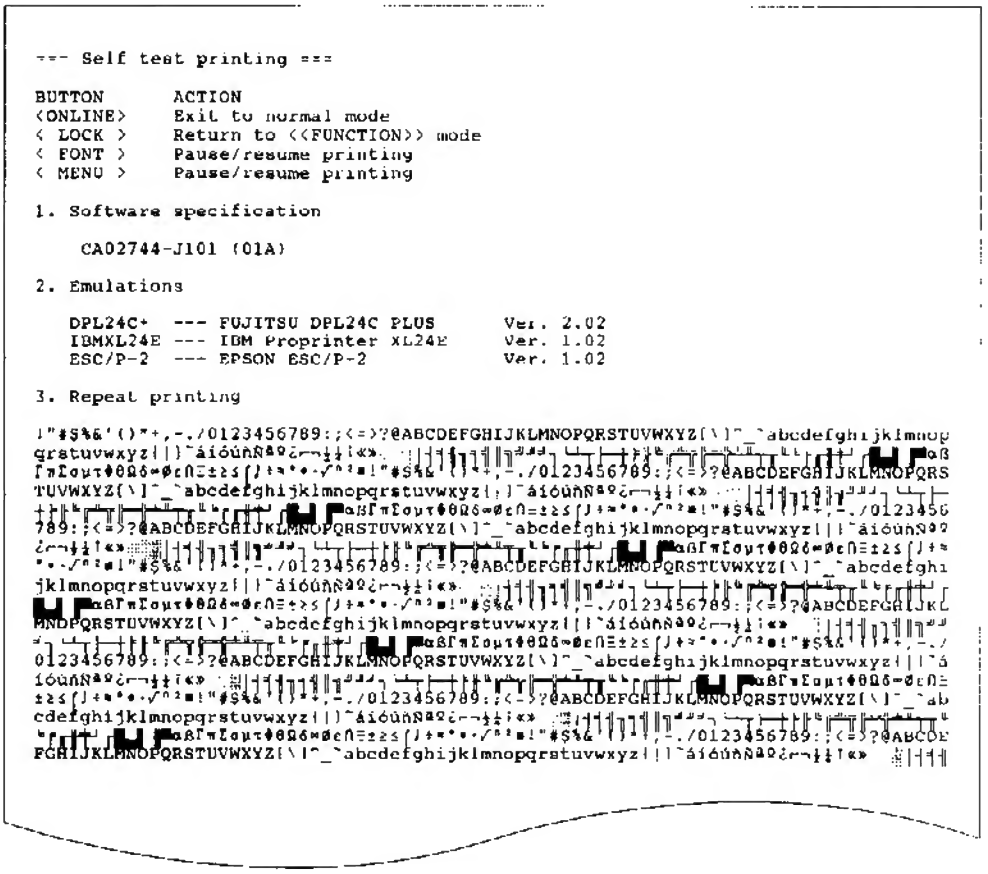

```
=== Self test printing ===

BUTTON       ACTION
<ONLINE>     Exit to normal mode
< LOCK >     Return to <<FUNCTION>> mode
< FONT >     Pause/resume printing
< MENU >     Pause/resume printing

1. Software specification

    CA02744-J101 (01A)

2. Emulations

   DPL24C+  --- FUJITSU DPL24C PLUS       Ver. 2.02
   IBMXL24E --- IBM Proprinter XL24E      Ver. 1.02
   ESC/P-2  --- EPSON ESC/P-2             Ver. 1.02

3. Repeat printing
```

Sample self-test page

5. To exit the self-test mode, press the ONLINE button. The printer will return online.

NOTE
The printer can also print a special "demo pattern" that illustrates some of the printer's capabilities. To print the demo pattern:

1. Load a sheet of letter or A4 size paper.

2. Turn the printer off .

3. While pressing the FONT button, turn the printer back on. The printer will start printing the demo pattern.

4. The demo pattern stops printing after one page. To pause or restart the demo during printing of a page, press the ONLINE button.

5. To exit demo mode, turn the printer off.

==== PRINTER FUNCTION SPECIFICATION ====

Printing technology:	24 wire dot matrix, Logic seeking
Resolution:	Letter quality - 360 X 180 dots/inch Draft quality - 120 X 180 dots/inch High speed draft - 90 X 180 dots/inch
Color (Option):	7 colors Black,Magenta,Cyan, Violet,Yellow,Orange, and Green
Standard command set:	Fujitsu DPL24C PLUS Version 2.01
Resident emulations:	Epson ESC/P2, IBM Proprinter XL24E
Character sets:	IBM PC char.sets 1 and 2 IBM PS/2 char.sets (Codepage 437,850,851, 852,855,860,863,865,866) ISO8859-1/ECMA 94 National character sets (USA,UK,German, French,Italian,Spanish,Swedish,Finnish, Norwegian,Danish 1 and 2,Hungarian 1 and 2, Slovenia 1 and 2,Mazowia 1 and 2,PG-DHN, Polish 1 and 2,Latin2 1 and 2,Latin P, ISO-Latin,Kamenicky 1 and 2,Turkish 1 and 2, ELOT927,ELOT928,Cyrillic,Lithuanian 1 and 2, Mik,Macedonian,PG-MAC,ABG,ABY,DEC GR,Greek11, HBR-DEC,HBR-OLD,ISO-Turkish,Korean and Legal) 691 characters per font
Print functions:	See below.

Fonts - <Bitmap> Courier 10, Pica 10, Prestige 12, Boldface PS
Compression 17, Correspondence 10, Draft 12, HI-Draft 12
OCR-B 10, OCR-A 10

<Scalable> Courier scalable Upright/Italic/Bold
Times PS Upright/Italic/Bold
Nimbus Sans PS Upright/Italic/Bold

Bold printing Shadow printing *Italic printing* Underline
Condensed superscript subscript

Double width Double height Double W & H

(The following functions are for the DPL24C PLUS only)

Underline TYPE 1 TYPE 2 TYPE 3 TYPE 4 TYPE 5 TYPE 6 Overline

Bar code print: Codabar,EAN8,EAN13, Code 3 of 9, Industrial 2 of 5, Interleaved 2 of 5, Matrix 2 of 5, UPC type A,Code 128

EAN example:

Scalable font + Screened outline:

SCALABLE

Demo pattern

CONNECTING THE PRINTER TO YOUR COMPUTER

Your printer has a Centronics parallel interface. An RS-232C serial interface is a factory-installed add-on option. Installation of the serial option gives a dual interface where either interface can be connected. The parallel interface connector has wire clips. The serial interface connector has tapped holes. Cables for both interfaces are available from dealers, cable manufacturers, and other suppliers. For detailed interface specifications, see Appendix D.

Selecting a Parallel Interface Cable

For the parallel interface, use a cable that meets the following specifications:

- √ At the printer end, use a shielded male Centronics connector, such as an Amphenol DDK 57FE-30360 or its equivalent. To prevent RFI (radio frequency interference), the connector cover must be connected to the cable shield.
- √ At the computer end, most computers (including IBM PCs) require a male DB-25P connector. Some computers, however, require a Centronics connector. To determine the type of connector your computer uses, refer to your computer user manual.
- √ Make sure that the cable length does not exceed 3 meters (10 feet).

Selecting a Serial Interface Cable

For the serial interface, use a cable that meets the following specifications:

- √ At the printer end, use a 25-pin male connector, such as a Cannon DB-25P or its equivalent.
- √ To determine the type of connector your computer requires, refer to your computer user manual or ask your dealer.
- √ The cable length can be up to 15 meters (50 feet). This type of length is required in many networking and shared-printer configurations.

Connecting the Interface Cable

To connect the interface cable:

1. Turn off both the printer and the computer.

2. Pushing the top of the shutter on the right side of the printer by the thumb, lift the bottom of the shutter by fingers until the shutter stays open to access the connector.

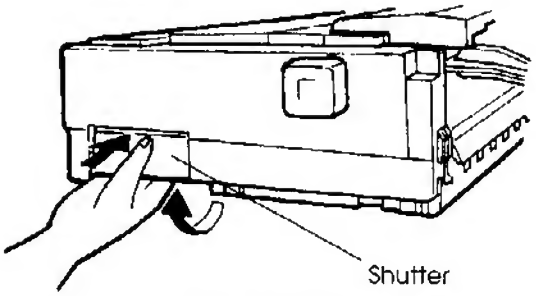

Opening the shutter

3. Attach the interface cable to the connector. If your printer has a dual interface, use the appropriate connector.

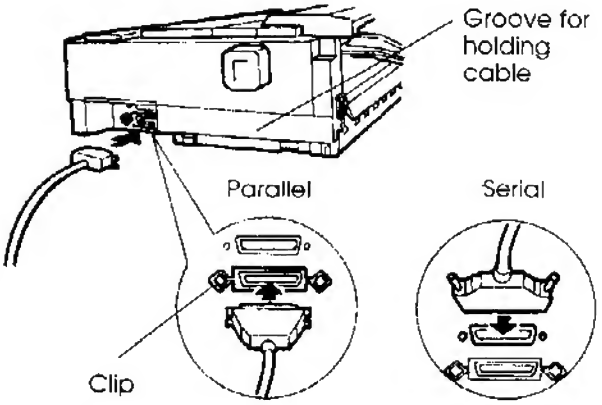

Connecting the interface cable

4. To secure a parallel interface cable, flip the fastener clips located on the printer into the notches on the cable connector. To secure a serial interface cable, tighten the screws in the cable connector.

5. Attach the other end of the interface cable to your computer. Gently pull on the cable to verify that it is secure.

6. Hold the cable along in the groove if you want to.

7. Push up the inside of the shutter to close the shutter.

SELECTING AN EMULATION

Before printing with your software, verify that the correct emulation is selected on your printer. This section describes the available emulations and their selection.

For Experienced Users:

The printer's preselected factory setting is the Fujitsu DPL24C PLUS emulation. If this emulation is acceptable, you may skip this section.

An emulation is a set of commands used by your software to communicate with the printer. There are many different emulations available for printers. Each emulation has unique features and capabilities. This printer offers three resident emulations:

- Fujitsu DPL24C PLUS (for Fujitsu DL-series printers)
- IBM Proprinter XL24E
- Epson ESC/P2

Resident emulations are stored in the printer's permanent memory.

Here are some points to help you determine which emulation to select:

- √ Determine which emulations your software supports. (Refer to your software documentation.) Since most software programs support this printer, try to run a program with the factory default emulation first. (DPL24C PLUS emulation is the factory default.) Try this emulation even if you are not sure of which emulation to choose. See Chapter 5 for detailed information about how your printer communicates with your software.
- √ If you are using more than one software package, determine which emulation is supported by the software you use most frequently. Select that emulation.

- √ If your software supports more than one emulation, select the DPL24C PLUS emulation if possible. This emulation has the greatest capabilities.

- √ If you want to use an emulation that is not supported by your software, contact your software manufacturer or printer dealer and ask whether support is available. You may be able to obtain a printer driver that is not shipped with the original software package.

To select an emulation, proceed as follows:

1. **Turn the printer on and load a sheet of paper.**

   To change a single printer setting, such as the emulation, you can use a single sheet paper. To change several printer settings as described in Chapter 5, you must load continuous forms paper. See Chapter 3 for paper loading instructions.

2. Enter setup mode.

Press the ONLINE button to place the printer offline. Then, press the FONT button and the MENU button.

As the printer enters offline setup mode, it prints the following information:

```
*** OFFLINE SETUP MODE ***

- Red cursor indicates the option to be selected.
- The selected option is underlined.
- "SAVE&END" function must be selected to exit setup mode.
- Following list shows how buttons function in setup mode:

BUTTON| ACTION on <<FUNCTION>> menu|  ACTION on <ITEM> menu
------+-------------------------------+-------------------------------
ONLINE|Reprint <<FUNCTION>> menu      |Select option & return to <<FUNCTION>> menu
 FONT |Select function               |Select option & print next item
 MENU |Select function               |Select option & print previous item
 LOCK |Move cursor to next function|Move cursor to next option

<<FUNCTION>>
SAVE&END MENU1   MENU2   HARDWRE ADJUST  CONFIG  DEFAULT LIST    SELF-TST HEX-DUMP
V-MENT
```

<<FUNCTION>> menu

Function

Red cursor on print guide

Initial printout in setup mode

Check that the <<FUNCTION>> menu is printed at the bottom of the page.

3. Select the MENU1 function.

Locate the red cursor on the plastic print guide. Initially, this cursor should be positioned under SAVE & END at the beginning of the <<FUNCTION>> menu. Press the LOCK button repeatedly to position the red cursor beneath MENU1, as shown below:

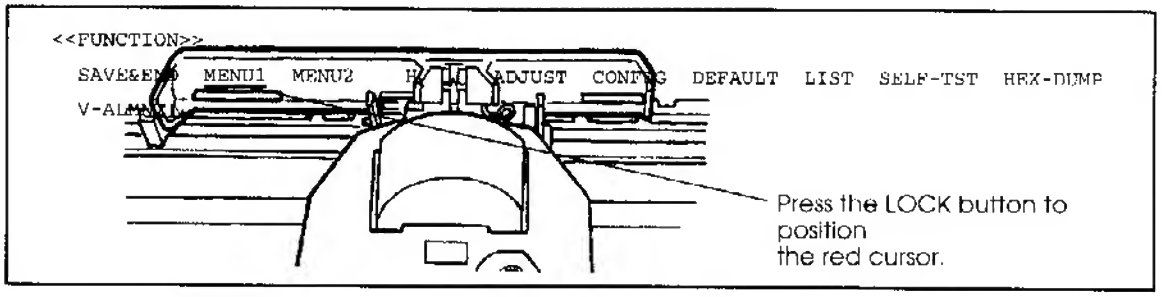

Press the FONT button or the MENU button to select MENU1 and print the following <EMULATE> options:

```
<EMULATE>     DPL24C+    XL24E     ESC/P2
```

The currently selected emulation is indicated by a short underline. In the figure shown above, the Fujitsu DPL24C PLUS emulation is selected.

4. Select an emulation.

Press the LOCK button repeatedly to position the red cursor under the required emulation. Press the FONT button to select the emulation and print the next MENU1 item.

5. **Exit MENU1.**

   Press the ONLINE button to exit the MENU1 function and reprint the <<FUNCTION>> menu.

6. **Exit setup mode to save the emulation.**

   To exit setup mode and save the new emulation, make sure that the red cursor is positioned under SAVE & END. Then press the FONT button or the MENU button. The printer selects SAVE & END and then goes online.

To change other printer settings using the printer setup mode, see Chapter 5.

PRINTING A SAMPLE PAGE (ONLINE)

Once the self-test verifies that the printer is functioning correctly, try printing using one of your software packages. This exercise will ensure that the printer is correctly connected to your computer.

If you are using a parallel interface, the printer usually prints the correct characters automatically. However, you may need to adjust the page layout or various print features using your software or the printer setup mode. If you are using a serial interface, the printer may not work at all or it may print a lot of "?" characters. In this case, the serial settings on the printer do not match those of your computer or your software. Before changing any settings, use the procedure described below to try printing using the printer's preselected factory settings.

Test communication between the printer and computer as follows:

1. Load a sheet of paper.

2. Check that the printer is online. If the ONLINE indicator is not green, press the ONLINE button.

3. Try to print using your word processor, a programming language, or other software.

4. Use your software printer selection menus or the printer setup mode (described in Chapter 5) to make required changes in the page layout or other print features.

   If the printer does not print or prints the wrong characters, proceed as follows:

   - Make sure that the interface cable is properly connected.

   - Make sure that the printer emulation selected in your software is the same as that selected on the printer.

   - If you are using a serial interface, make sure that the printer serial interface settings are the same as those on the computer. The printer's preselected factory settings are 8 data bits, no parity, 1 stop bit, 9600 baud, and XON/XOFF protocol.

     You can change the serial settings on either the printer or your computer. To change the printer settings, see Chapter 5. To change the computer settings, use the selection menus provided by your software or the commands of your computer operating system. The following example uses the MS-DOS operating system:

Using MS-DOS to Specify Serial Interface Settings

For an IBM PC or compatible device, use the following MS-DOS MODE commands to set the computer serial settings to match the printer factory settings:

```
MODE COM1:9600,N,8,1,P
MODE LPT1:=COM1
```

To activate these settings whenever you turn the computer on, write the MODE commands in your AUTOEXEC.BAT file. Make sure that the MODE.COM file is included in your root directory.

If the printer still doesn't work, consult your dealer or someone experienced in serial interface communications.

You are now finished setting up and testing the printer. To familiarize yourself with everyday printer operations, such as loading paper, selecting print features, and printing, see Chapters 3 and 4.

3

PAPER HANDLING

This chapter explains how your printer uses paper. Topics covered are:

- Selecting paper
- Overview of paper operations
- Adjusting for paper thickness
- Using single sheets
- Using continuous forms (push-tractor feed and pull-tractor feed)
- Feeding and positioning paper
- Switching paper types

Tips for paper handling are given at the end of this chapter. Check that section if you are using multipart forms, envelopes, or labels.

SELECTING PAPER

The printer can handle either single sheets or continuous forms. Single sheets, also called cut sheets, include envelopes and noncontinuous, multipart forms. Continuous forms include labels and multipart forms fed into the printer using the forms tractors.

For best results, use paper that meets the specifications listed below. (See Appendix B for detailed specifications.) If you are unsure of the suitability of a particular paper, try testing the paper or consult your dealer.

Length	80 columns	Single sheets: 76 to 364 mm (3 to 14.3 in) Continuous forms: 102 mm (4 in) or greater
	136 columns	Single sheets: 76 to 420 mm (3 to 16.5 in) Continuous forms: 102 mm (4 in) or greater
Width	80 columns	Single sheets: 102 to 267 mm (4 to 10.5 in) Continuous forms: 102 to 267 mm (4 to 10.5 in)
	136 columns	Single sheets: 102 to 420 mm (4 to 16.5 in) Continuous forms: 102 to 420 mm (4 to 16.5 in)
Thickness		0.35 mm (0.014 in) maximum total thickness.
Copies		1 to 5 copies, including the original. For carbon-interleaved paper, the carbon counts as a copy.

OVERVIEW OF PAPER OPERATIONS

The following levers and buttons are used in paper handling:

- Paper select lever at the top left corner of the printer
- Paper thickness lever at the top right corner of the printer
- LF/FF, TEAR OFF, and LOAD buttons on the control panel (A different function is enabled when each button is pressed in conjunction with the ONLINE button.)

The following figure shows the location of each lever and button:

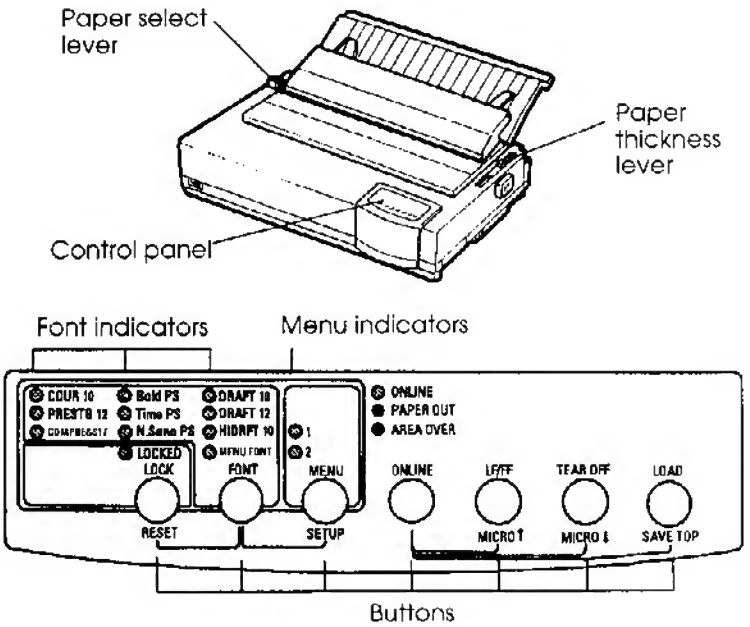

Printer levers and buttons

Table 3.1 summarizes the use of levers and buttons in paper handling. More detailed information is provided later in this chapter.

NOTE

To load or feed paper, the printer must be:

- **Online but not receiving or printing data**
- **Offline but not in setup mode**

To micro-feed paper, which is done with the ONLINE button, the printer must be:

- **Offline but not in setup mode.**

Table 3.1 Levers and Buttons Used for Paper Handling

Lever/Button	Purpose	Action
LF/FF	Form feed Line feed Forward micro feed	Press and hold LF/FF to execute a form feed. Continuous forms are fed forward by one page. Single sheets are ejected. Press LF/FF within three seconds to feed paper forward by one line. Press LF/FF and ONLINE to feed paper forward by 1/180 inch.
TEAR OFF	Advance forms for tear-off Reverse micro feed	Press TEAR OFF to advance the forms perforation to the tear-off edge. Tear off the forms, then press any button to retract remaining the forms. Press TEAR OFF and ONLINE to feed paper backward by 1/180 inch.
LOAD	Load/unload paper Save adjusted load point	Press LOAD to load paper or to retract continuous forms to the "park position." Press LOAD and ONLINE to permanently store the load position adjusted by micro feeding.
Paper select lever *	Select paper path	Move the paper select lever forward for single sheets (cut sheet stand or feeder). Move the paper select lever backward for continuous forms.
Paper thickness lever	Adjust for paper thickness or number of copies	Select the number corresponding to the number of copies (including the original). Vary the setting up or down (including **A** to **D**) to optimize printing. Select **D** when replacing ribbon or clearing a paper jam.

* **The following graphics are engraved on the cover.**

: Continuous forms

: Cut sheets

ADJUSTING FOR PAPER THICKNESS

The printer can handle paper of different thicknesses, including multipart forms with up to five parts (original plus four copies). For details on paper thickness specifications, see Appendix B.

The paper thickness lever, located at the top right corner of the printer, allows you to adjust for different paper thicknesses. Be sure to adjust the paper thickness lever whenever you change the number of copies being printed.

The paper thickness lever has nine settings: **1** to **5** and **A** to **D**. Use Table 3.2 to determine the appropriate setting for your paper; then, move the paper thickness lever to the appropriate position.

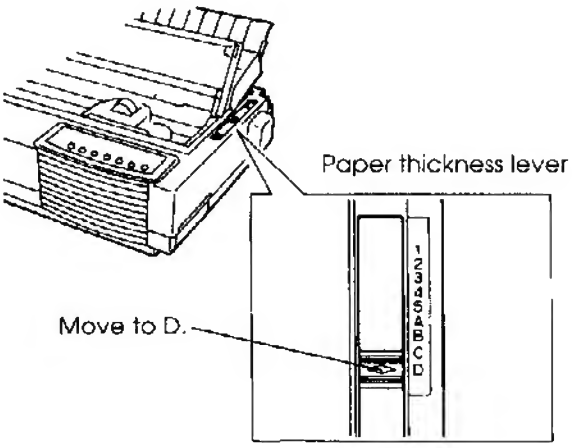

Adjusting the paper thickness lever

Table 3.2 Paper Thickness Lever Settings

Number of Copies (Including the Original) *1	Setting *2
1 copy	1
2 copies	2
3 copies	3
4 copies	4
5 copies	5
Ribbon replacement	D

*1 For carbon-interleaved paper, the carbon counts as one copy.
*2 Vary the setting up or down (including **A** to **D**) to optimize printing. Select **D** when replacing a ribbon or clearing a paper jam. For labels and envelopes, use trial-and-error to determine a satisfactory setting.

NOTE
If printing is messy, the ribbon misfeeds, or the paper jams, move the lever one setting higher.

USING SINGLE SHEETS

This section describes how to load paper in the cut sheet stand or cut sheet feeder. The cut sheet stand allows paper to be loaded manually, one sheet at a time. A cut sheet feeder allows paper to be loaded automatically from a stack.

Loading a Single Sheet of Paper

To load a sheet of paper into the cut sheet stand:

1. Make sure that the printer is turned on. Check that rear-fed continuous forms are retracted to the park position. (For details, see the section **Unloading Continuous Forms** later in this chapter.)

2. If necessary, reset the paper thickness lever. (See the section **Adjusting for Paper Thickness** earlier in this chapter.)

3. Move the paper select lever forward. (This lever is at the top left of the printer.)

4. Raise the cut sheet stand. Position the left paper guide. Note that its movable range is limited.

Adjusting the left margin

Below the left paper guide, the cut sheet stand has a scale graduated in units of 0.1 inch. When the left paper guide is positioned all the way to the right, the left margin is 5 mm (0.2 inch). To help align paper, also use the two inch-based rulers on the separator of the printer. The gradations on the ruler are for 10 columns per inch.

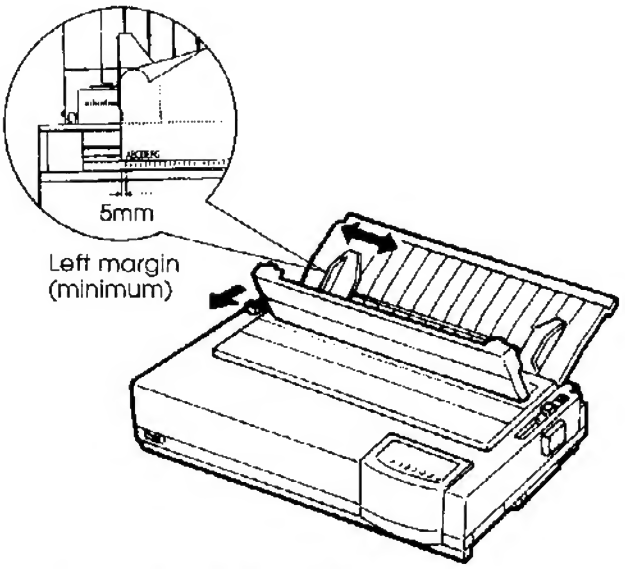

Preparing to load a sheet of paper

5. Insert a sheet of paper into the cut sheet stand. Make sure that the bottom edge of the paper engages snugly with the platen. Adjust the right paper guide.

6. Press the LOAD button. The paper will advance to the top-of-form position. The top-of-form position is the first line on which printing can start. To adjust the position of the paper slightly, simultaneously press the ONLINE button and the LF/FF button or the TEAR OFF button. The paper will move forward or backward in 1/180-inch increments.

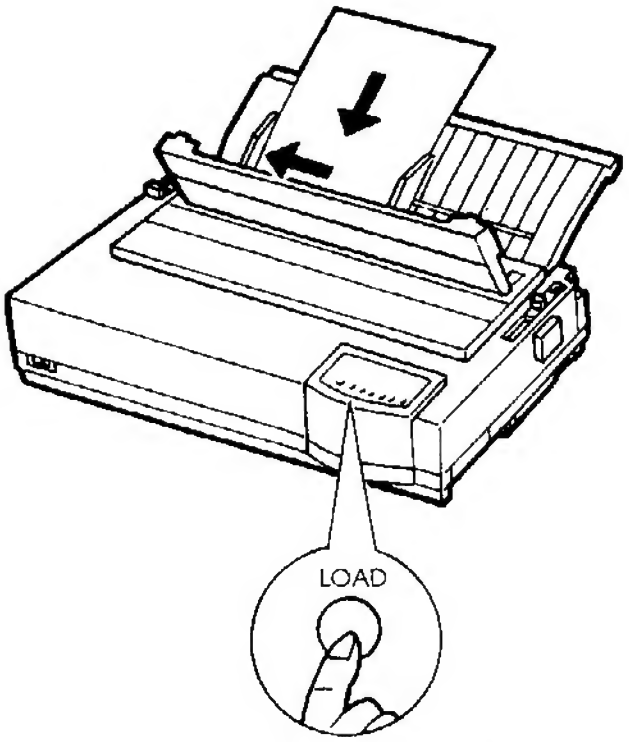

Loading a sheet of paper

7. Place the printer online. Print a sample page and check the page margins. Make the following adjustments, as necessary:

   - Horizontal alignment. Readjust the paper guides if required.
   - Top-of-form setting (see Chapter 5).
   - Margin settings. Use your software or the printer setup mode (see Chapter 5).

Loading Paper in the Cut Sheet Feeder (Option)

A cut sheet feeder allows automatic printing on single sheets without the need to manually insert the sheets one-by-one. This can save you a lot of time when printing long files using single sheets. The 80-column printer uses an ASF100 cut sheet feeder; the 136-column printer uses an ASF300 cut sheet feeder. See Chapter 8 for more information on cut sheet feeders including a double-bin adapter.

The cut sheet feeder cannot be used with pull-tractor feeding (see the section **Using Continuous Forms** later in this chapter).

Before installing the sheet feeder on your printer:

1. Remove the acoustic cover and the two brackets from the separator. (To remove the brackets, open the separator and release their locking hooks from behind the separator.)
2. Remove the cut sheet stand from the printer. (Set the cut sheet stand to the down position, press in on the left grip to release its tab from the hole, and then pull out the cut sheet stand.)

For installation of the feeder, refer to its user's manual. When a feeder is mounted, the printer mechanically knows the feeder type and controls the feeder accordingly.

The following procedure is for the ASF300 cut sheet feeder. The same procedure is used for the ASF100 cut sheet feeder.

NOTES
The rear tabs of the ASF100 cut sheet feeder are the same as the bin levers of the ASF300. The ASF100 cut sheet feeder does not have paper guide locking levers.

To load paper in the cut sheet feeder:

1. Make sure that the printer is turned on and continuous forms are retracted to the park position. (For details, see the section **Unloading Continuous Forms** later in this chapter.)
2. If necessary, reset the paper thickness lever. (See the section **Adjusting for Paper Thickness** earlier in this chapter.)
3. Move the paper select lever forward. (This lever is at the top left corner of the printer.)

4. Prepare the feeder as follows:

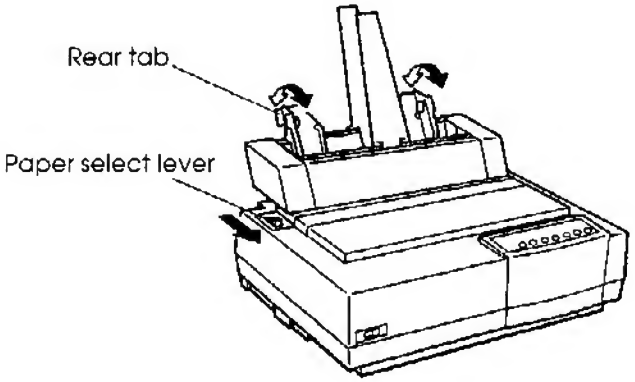

Preparing the cut sheet feeder (ASF100)

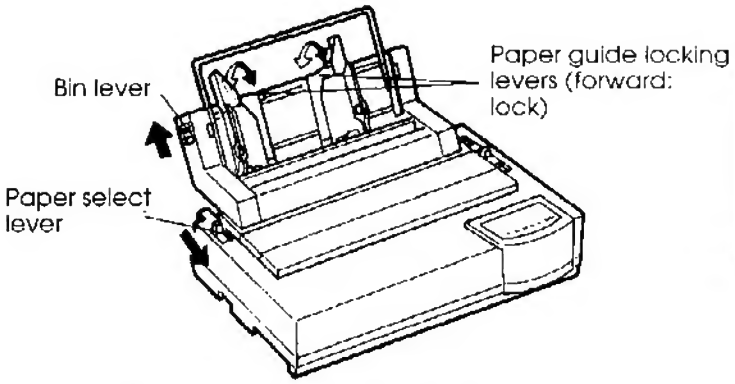

Preparing the cut sheet feeder (ASF300)

- To open the paper bin, push the bin lever up to the "OPEN" position. The bin lever is located on the left side or both sides of the feeder.
- Push back both of the paper guide locking levers on the feeder.
- Position the left paper guide. Pull the left locking lever forward to secure the left paper guide.

Adjusting the left margin

To help align the left paper guide, use the inch-based ruler located behind the paper guides. The ruler is graduated in 10 columns per inch. For example, setting the left paper guide 12.7 mm (0.5 inch) from the left gives a left margin of 6.3 mm (0.25 inch) plus the left margin specified by your software or the printer setup mode.
The following figure is for ASF300-type cut sheet feeder.

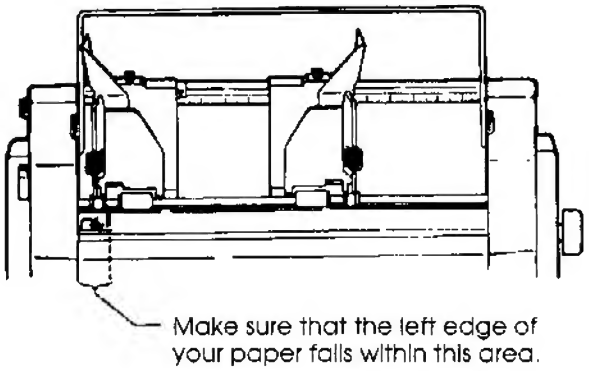

- Slide the right paper guide until the distance between the two guides is the approximate width of your paper.

5. Manually fan the stack of paper and place it in the paper bin.

NOTE
A short vertical mark inside each paper guide indicates the maximum capacity of the bin. Make sure that your paper stack does not cover these vertical marks.

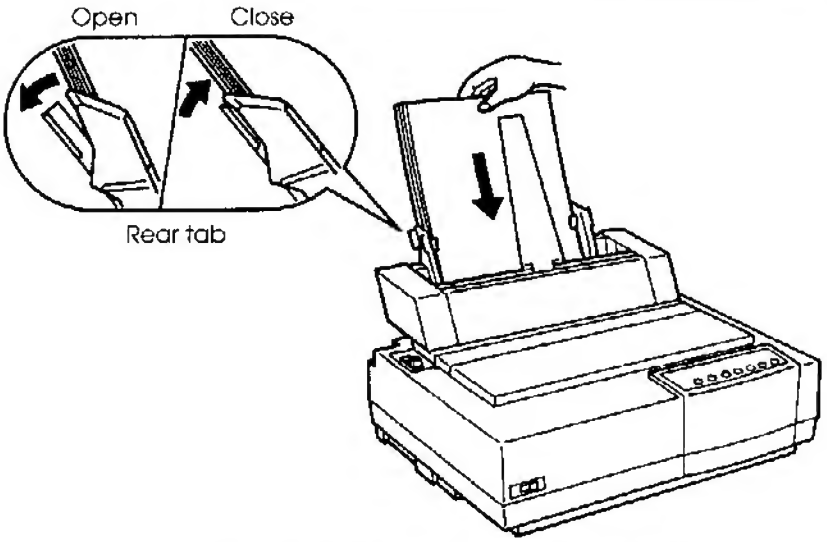

Loading the cut sheet feeder (ASF100)

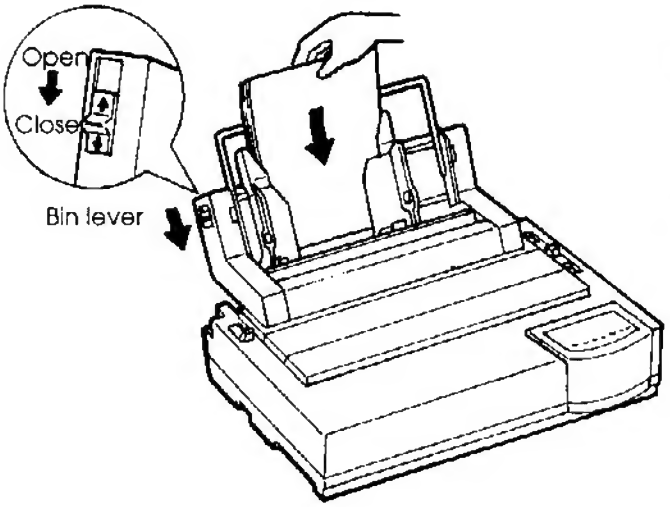

Loading the cut sheet feeder (ASF300)

6. Readjust the right paper guide, leaving a slight gap between the paper guide and the right edge of the paper. About 1.5 mm (1/16 inch) is sufficient. Pull the right locking lever forward.

7. Push the bin lever down to the "CLOSED" position.

8. Load paper to the top-of-form position using either of the following methods:
   - Load the paper *manually*. Press the LOAD button. The paper will advance to the top-of-form position. Adjust the position of the paper as needed by simultaneously pressing the ONLINE button and the LF/FF button or the TEAR OFF button (micro feed).
   - Load the paper *using your software*. Press the ONLINE button to place the printer online. Load paper according to the instructions in your software documentation. Most software packages load paper automatically.
9. Place the printer online. Print a sample page and check the page margins. Make the following adjustments, as necessary:
   - Horizontal alignment. Readjust the paper guides if required.
   - Top-of-form setting (see Chapter 5).
   - Margin settings. Use your software or the printer setup mode (see Chapter 5).

Ejecting Single Sheets

If you print using software, each sheet is ejected automatically when the end of the printed page is reached. To manually eject sheets of paper, use either of the following methods:

- Press and hold down the LF/FF button to execute a forward form feed.
- Turn the platen knob clockwise.

USING CONTINUOUS FORMS

Continuous forms paper, fanfolded at the horizontal perforations, is ideal for printing rough drafts and long files. The paper is fed into the printer using the forms tractors. If the forms tractors unit is mounted at the rear of the printer, it pushes paper from the rear to the platen. This is called push-tractor feeding. If the forms tractor unit is mounted at the top of the printer, it pulls paper from the bottom or rear of the printer to the platen. This is called pull-tractor feeding.

Positioning the Paper Stack

Place the stack of continuous forms paper directly below the rear of the printer or below the bottom slot of the printer. After the paper is installed in the printer, the paper path should look like this:

Good placement

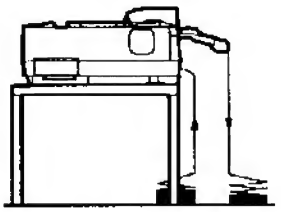

Push-feed, from rear slot

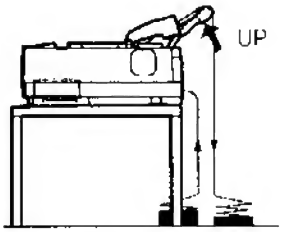

Push-feed, from rear slot with paper-stapled multipart forms

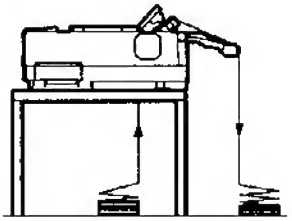

Pull-feed, from bottom slot

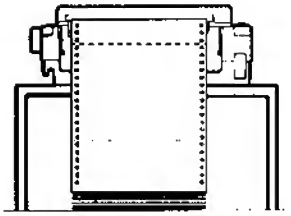

Bad placement

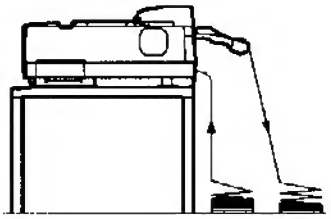

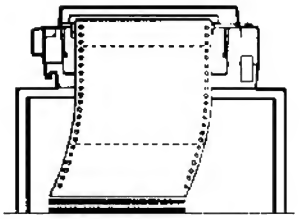

Placement of continuous forms

Loading Continuous Forms (Push Tractor and Rear Feed)

This section explains how to use continuous forms as the tractor unit is installed at the rear of the printer. The tractor unit pushes continuous forms. This condition applies when you first purchase the printer.

You can use continuous forms paper even if you have a cut sheet feeder installed. However, we recommend that continuous forms paper be loaded before the feeder installed. To load continuous forms paper:

1. Make sure that the printer is turned on. Remove any single-sheet paper from the printer.

2. If necessary, readjust the paper thickness lever for continuous forms. (See the section **Adjusting for Paper Thickness** earlier in this chapter.)

3. Move the paper select lever to the rear of the printer.

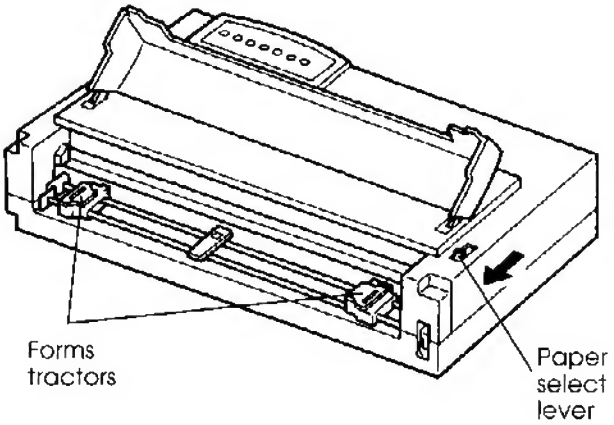

Preparing to load continuous forms paper

4. Release the tractor locking levers by pulling them up. Open the tractor paper holders. See the following figure.

5. Position the right tractor (as seen from the rear of the printer). Push the right locking lever down to secure the tractor. Center the middle forms support.

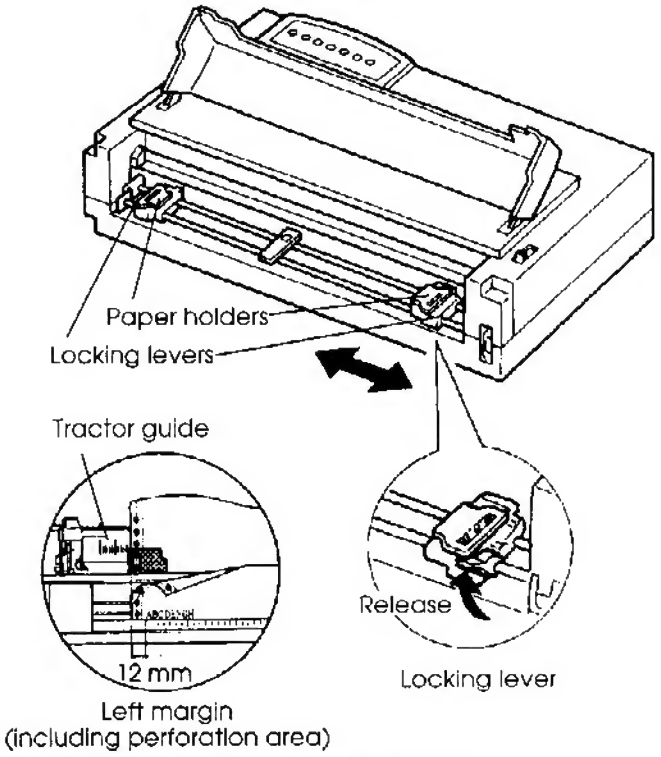

Positioning the tractors

Adjusting the left margin

Below the right tractor, as seen from the back, there is a tractor guide, short inch-based ruler graduated in 10 columns per inch. Use the ruler to help position the tractor. When the paper edge is positioned to the left most line, the left margin is 12mm (0.5 inch) including perforation area.

7. Fit the paper feed holes onto the left and right tractor pins. Adjust the left tractor (as seen from the rear of the printer) to the width of the form. Close the paper holders.

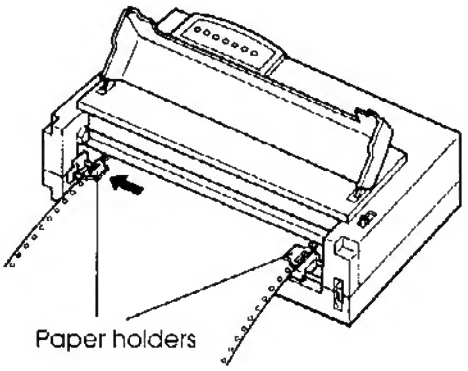

Adjusting paper tension

8. Pull the left tractor (as seen from the rear) to stretch the paper taut. Push the left locking lever down to secure the tractor in place.

9. Reinstall the cut sheet stand. For installation, see the section **Installing the Cut Sheet Stand** in Chapter 2.

10. When using paper-stapled multipart forms, raise the cut sheet stand to the up position. For other continuous forms paper, lower the cut sheet stand to the down position.

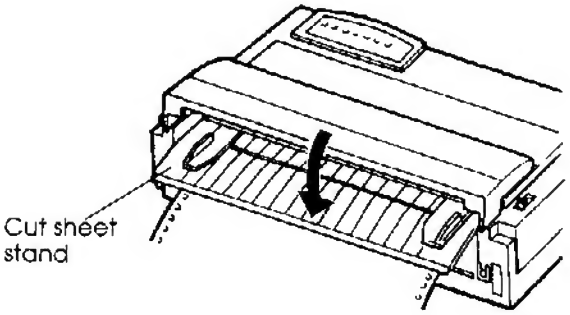

Lowering the cut sheet stand

11. Press the LOAD button to advance the paper to the top-of-form position. Top-of-form is the first line on which printing can start.

12. Press the ONLINE button to place the printer online. Print a sample page and check the page margins. Make the following adjustments, as necessary:

- Horizontal alignment. Move the forms tractors as required.
- Top-of-form setting (see Chapter 5).
- Margin settings. Use your software or the printer setup mode (see Chapter 5).

Loading Continuous Forms (Pull Tractor and Bottom Feed)

This section explains how to use continuous forms as the forms tractor unit is installed at the top of the printer. The forms tractor unit pulls continuous forms. This is called pull-tractor feed. To use pull-tractor feed, you must remove the forms tractor unit from the rear of the printer and install it on the top of the printer.

For pull-tractor feed, this printer is equipped with a paper path slot on the bottom of the printer to allow for continuous forms feed from under the printer. You must use a desk or rack that has an appropriate paper path slot. For paper path, see the section **Positioning the Paper Stack** earlier in this section.

The 80-column printer printer uses the separator and the bail roller unit; the 136-column printer uses the separator including the bail rollers. Thus, step 4 of the following procedure differs for the 80-column printer and the 136-column printer.

To reinstall the tractor unit for pull-tractor feed:

1. Turn off the printer.

2. Raise and pull up the acoustic cover to remove it and raise the cut sheet stand and the back cover together to access the forms tractor unit.

3. Pull up both ends of the tractor unit to detach the catches of the tractor unit from the support studs. Then pull the tractor unit.

4. Return the cut sheet stand and the back cover to their original position.

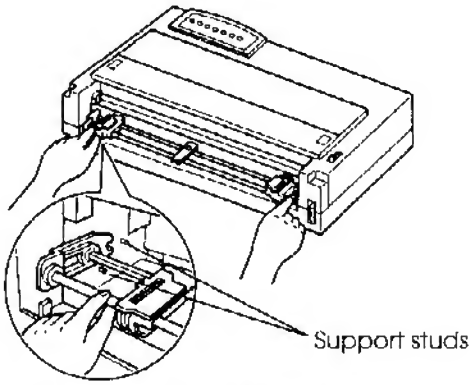

Removing the tractor unit

5. (80-column printer)
   Raise the rear edge of the separator and remove it. Pull the bail roller unit up to detach the catches of the bail roller unit from the support studs, then remove the bail roller unit. Reinstall the separator and pull it to the front of the printer.

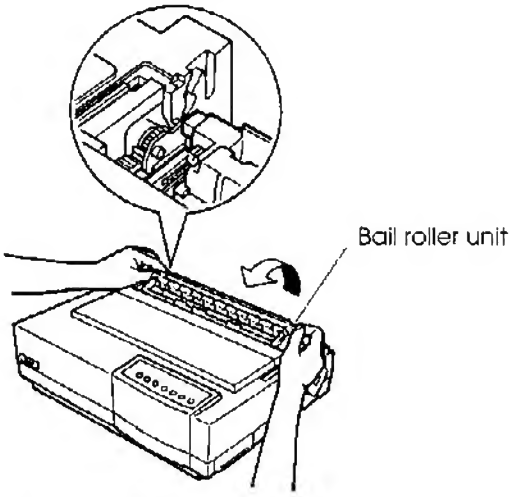

Removing the bail roller unit

(136-column printer)
Pull the separator to the front of the printer.

6. Position the catches of the tractor unit on the support studs near the platen shaft, push the tractor unit toward the front of the printer (①), and snap down the tractor unit into place (②). Turn the platen knob to make sure that the tractor gear fully engages the platen shaft gear. Lean the separator against the tractor unit.

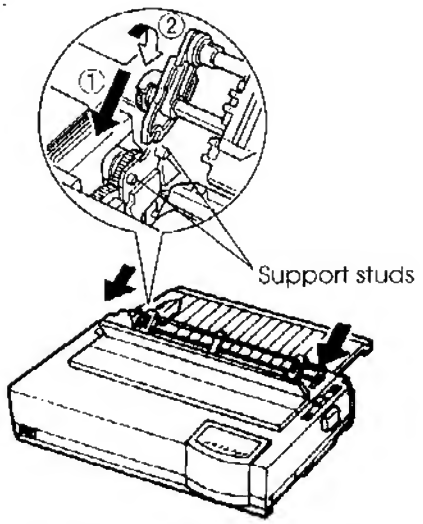

Installing the tractor unit for pull-tractor feed

The following are procedures when you want to feed continuous forms paper from under the printer (bottom feed).

To load continuous forms paper:

1. Turn off the printer.
2. Make sure that the paper path slot of the printer is adjusted with the desk or the printer rack slot.
3. Set the paper thickness lever to position **D** (widest gap).
4. Move the paper select lever to the rear (continuous forms).
5. Open the front cover.

6. Place the continuous forms paper below the table and pass the paper through the slot of the table then through the bottom slot of the printer up to the platen.

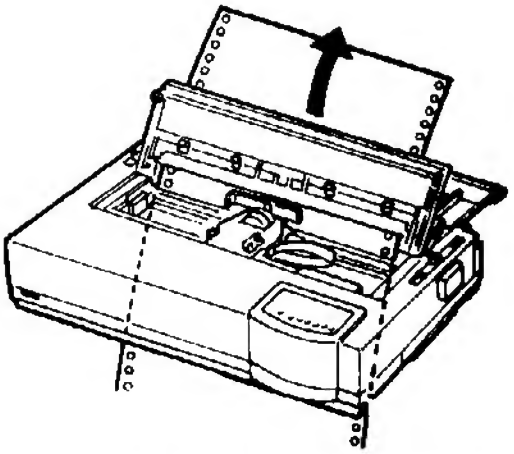

Passing continuous forms paper from under the printer

7. Close the front cover and open the two holders of the left and right tractors. (Each tractor has a larger main holders and a smaller subholder.)

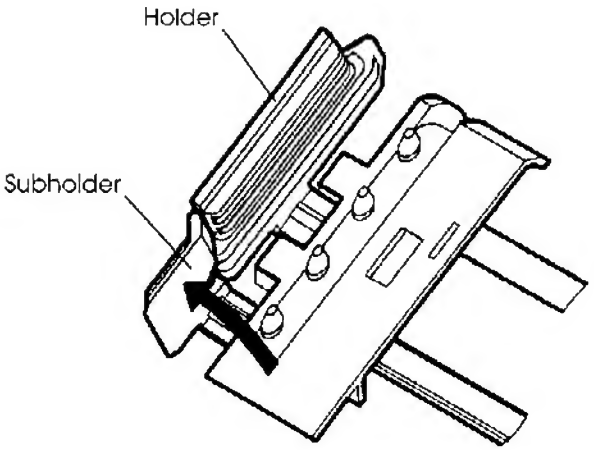

Opening the two holders

8. Set the continuous forms on the tractors in the same way as described for push-tractor feed.

9. Turn power on.

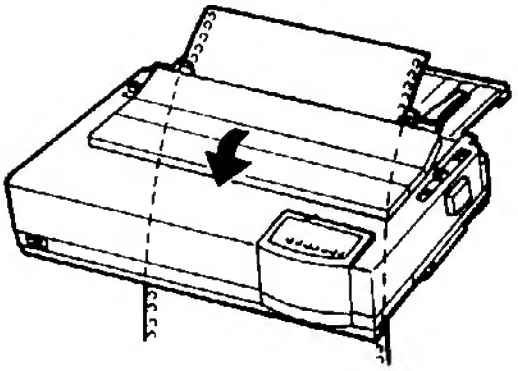

Setting continuous forms paper on the tractors

10. Adjust the paper thickness lever to the appropriate position.

11. If the printer is offline, press the ONLINE button to place the printer online. Print a sample page and check the first line and the page margins. Make the following adjustments, as necessary:

    - Horizontal alignment. Move the tractor unit as required.
    - Top-of-form setting. See Chapter 5.
    - Margin settings. Use your software or the printer setup mode (see Chapter 5).
    - Graphics printing or multiheight printing. Use push tractor feed.

Unloading Continuous Forms

NOTE
Continuous forms paper that is fed by the pull-tractor cannot be unloaded.

To unload continuous forms:

1. Make sure that the paper select lever is set to the rear position.

2. Press the LOAD button. The continuous forms paper is retracted to the park position. If the paper cannot be retracted in one operation, continue to press the LOAD button until the paper is parked.

   NOTE
   The printer can retract continuous forms paper a maximum of 55.8 cm (22 inches) per operation.

3. To remove the paper, raise the tractor paper holders and lift out the paper.

Tearing Off Continuous Forms

NOTE
Continuous forms paper that is fed by the pull-tractor cannot be torn off in this way.

Your printer has a special "tear-off edge" that allows you to tear off printed pages without wasting paper. The tear-off edge is located on the separator.

To tear off continuous forms using the tear-off edge:

1. Press the TEAR OFF button. The bottom perforation of the last page advances to the tear-off edge. If you specified TEAR OFF: AUTO using the HARDWRE function in setup mode, the paper automatically advances to the tear-off edge at the end of each job (or when the printer has printed all the data received).

NOTE
If the bottom perforation of your paper is not positioned at the tear-off edge, the length of your paper may not be specified correctly in your software or the printer setup mode. Check that the paper length is specified correctly. For information on specifying page length using setup mode, see Chapter 5.

2. Tear the paper off at the perforation.

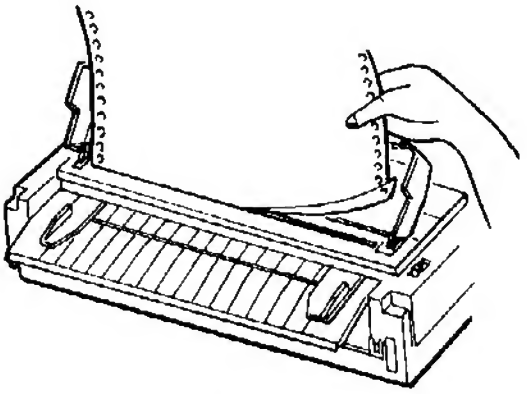

Tearing off continuous forms

3. Press any button to retract the forms back to the top-of-form position.

FEEDING AND POSITIONING PAPER

Line Feed/Form Feed

Use the line feed/form feed function to move paper forward. This function is valid when the printer is online or offline. Pressing and holding down the LF/FF button feeds one sheet of paper. Pressing the LF/FF button once advances the paper one line (do not hold the button more than three seconds).

The printer does not allow you to execute "reverse" form or line feeds from the control panel. To feed paper backward, manually rotate the platen knob. Remember that the top-of-form will slip from the original setting.

Micro Feed

Use the micro feed function to fine tune the position of the paper. This function is valid when the printer is offline. Press the ONLINE and LF/FF buttons simultaneously to micro-feed paper forward. Press the ONLINE and TEAR OFF buttons simultaneously to micro-feed paper backward.

Remember that the top-of-form will slip from the original setting.

Load Position Adjust

Use also the micro feed function to adjust the load position of the paper. This function is valid when the printer is offline. When this function is used immediately after the LOAD button is pressed, the adjusted position is retained as the new load position until the power is turned off. Pressing the ONLINE and LOAD buttons simultaneously saves the new position permanently.

SWITCHING PAPER TYPES

If you have more than one type of job, it is often necessary to switch between continuous forms and single sheets. This section explains how to switch between paper types. It is not necessary to remove the continuous forms paper from the printer. This function is not available for pull-tractor feed.

NOTE
This function is not available for continuous forms paper that is fed by the pull-tractor.

Switching to Single Sheets

To switch from continuous forms to single sheets:

1. Tear off your printed pages.

2. Retract the forms paper to the park position by pressing the LOAD button. The PAPER OUT indicator turns red.

   CAUTION
   Failure to retract the forms paper will cause paper jams.

3. Move the paper select lever forward to the single sheet position.

4. Mount the cut sheet stand or cut sheet feeder. (For details, see the section **Using Single Sheets** earlier in this chapter.) If you are using the cut sheet stand, press the LOAD button to advance the paper to the top-of-form position. If you are using the cut sheet feeder, you cannot advance paper by the LOAD button; only a command from the computer advances the paper to the top-of-form position.

You are now ready to print using single sheets.

Switching to Continuous Forms

To switch from single sheets to continuous forms:

1. If a sheet of paper is loaded, remove the paper by turning the platen knob or pressing and holding down the LF/FF button.

   CAUTION
   Failure to remove paper may cause a paper jam.

2. Move the paper select lever to the rear to the continuous forms position.

3. Press the LOAD button. The continuous forms paper advances to the top-of-form position.

You are now ready to print using continuous forms paper.

TIPS ON PAPER HANDLING

General Tips

- Use high-quality paper. Do not use paper that is wrinkled or curled at the edges.
- Do not use paper with staples or metal parts.
- Do not use paper with unpredictable variations in thickness, such as paper with partial multilayers, paper with embossed printing, and labels with the backing sheet exposed.
- Store paper in a clean, dry environment.

Multipart Forms

- Avoid using carbon-interleaved single sheets if possible. Printing tends to become misaligned on the bottom sheet.
- To ensure smoother feeding of paper-stapled, multipart forms, raise the cut sheet stand to support the forms.

Envelopes

When printing envelopes, use the cut sheet stand or the manual feed slot of the cut sheet feeder. Note the following:

- Set the paper thickness lever to best accommodate envelope thickness.
- When loading envelopes, make sure that the envelope flaps face forward. Otherwise, the envelopes may jam in the printer.

Labels

- Be careful to check operating conditions when using labels. Labels are sensitive to temperature and humidity.
- Only use labels mounted on continuous forms backing sheets. Do not print labels mounted on single sheet backing. Labels mounted on single sheet backing tend to slip and printing becomes crooked.
- Set the paper thickness lever to best accommodate label thickness.
- Do not feed labels backwards using the LOAD button from the control panel. Jamming may occur.
- Do not use the printer tear-off feature when printing labels. If the labels are retracted, the backing may peel off and the labels may jam in the printer.
- Do not leave labels loaded in the printer. If labels curl around the platen, jamming may occur when printing is resumed.
- Test-print labels before running a job. If jams occur, set the paper thickness lever to a wider position. If jamming problems continue, try a different type of label.

4

PRINTING

This chapter describes the following everyday printing operations:

- Selecting print features
- Starting, stopping, or resuming printing
- Removing printed pages
- Clearing the print buffer

Instructions for loading paper are given in Chapter 3.

SELECTING PRINT FEATURES

The print features you select determine how your printed pages will look. Print features include the following:

- Print quality
- Fonts
- Pitch (characters per horizontal inch)
- Page length and width
- Line spacing (lines per vertical inch)
- Color

To select print features, you can use either commercial software or the printer control panel. The method you use depends on the capabilities of your software. If your software has most of the features you require, you may rarely – if ever – have to use the control panel. *In fact, your software often overrides the printer settings.*

If your software has limited options, you can use the printer control panel to select print features. Sometimes, the control panel enables you to select features not available through your software. For example, you can select downloaded fonts not supported by your software.

Using Commercial Software

Many commercial software packages offer a wide variety of print features, including some features that are not supported by this printer. For example, software often provides a wider range of font sizes than the printer can accommodate. Software also allows you to specify multiple fonts on a page and multicolor printing. To determine which features your software supports and how to select them, refer to your software documentation.

Using the Control Panel

Use the FONT button and the MENU button to directly select one of the menus and one of the fonts listed on the printer control panel:

- Select one of the two menus
- Select one of the nine resident fonts

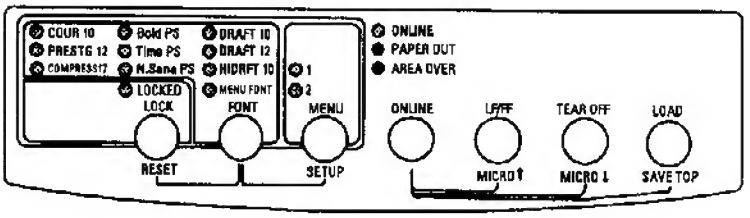

Printer control panel

The MENU button specifies MENU1 or MENU2, either of which allows you to specify different sets of options in advance. Some of the print features include emulation, print quality, character pitch, and line spacing.

The FONT button specifies one of the nine resident fonts defined by font names and pitches on the control panel. The selectable resident fonts are Courier 10, Prestige 12, Compressed 17, Boldface PS, Timeless PS, Nimbus Sans. PS, Draft 10, Draft 12, and High-speed Draft 10.

If you select LOCKED, the printer will ignore font commands from the computer and continue to use the font specified by the control panel. Press the LOCK button to select LOCKED.

If you select MENU FONT the printer will use the font and pitch assigned in MENU1 or MENU2. This chapter does not explain how to assign values to options in the menu. *If you haven't already assigned values to MENU 1 and MENU 2, refer to Chapter 5 now.*

When you first turn the printer on, the MENU 1 and MENU FONT indicators are lit; that is, all of the print features assigned to MENU1 are enabled. However, you can easily switch to MENU2 before printing. You can also select a resident font other than the fonts assigned to MENU1 and MENU2.

To select MENU1 or MENU2 and one of the resident fonts, use the FONT and MENU buttons to light the desired indicators as described in the following paragraphs.

NOTE
For easy reference, keep a list of your current MENU 1 and MENU 2 settings near the printer. To print a list of current settings, see the section Printing a List of Selected Options in Chapter 5. You may also want to use the space provided in Table 4.1 to record your settings.

Selecting MENU1 or MENU2

When you first turn the printer on, MENU1 is selected. To change to MENU2 or back to MENU1, proceed as follows:

1. Press the ONLINE button to place the printer offline.

2. Repeatedly press the MENU button. The lighted indicator (1 or 2) shows the menu selected. When the menu selection is changed, the font (font, pitch, and quality) assigned in the selected menu becomes valid.

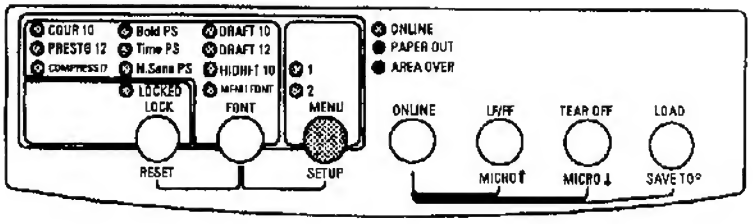

Printing

Table 4.1 MENU1 and MENU2 Settings

Setting	Default Settings *For easy reference, check (√) or record your default settings in the space below.*	
Print Feature	**MENU1**	**MENU2**
Emulation Fujitsu DPL24C PLUS IBM Proprinter XL24E Epson ESC/P2		
Print quality Letter Report Draft High-speed draft		
Font Courier 10 Prestige Elite 12 Compressed 17 Boldface PS Pica 10 Correspondence Courier Outline Uplight Courier Outline Italic Courier Outline Bold Timeless PS Upright Timeless PS Italic Timeless PS Bold Nimbus Sans PS Upright Nimbus Sans PS Italic Nimbus Sans PS Bold OCR-B 10 OCR-A 10 Downloaded font 0 Downloaded font 1		
Pitch 2.5, 3, 5, 6, 10, 12 15, 17, 18 or 20 cpi Proportional spacing		
Other features:		

3. To change to a resident font, see the next section. Otherwise, press the ONLINE button to return online. You are ready to print using the selected menu.

Changing the menu font to a resident font

Before printing, you can use the control panel to select a resident font other than the font defined in the selected menu. To change a menu font to a resident font:

1. Make sure that the printer is offline.

2. Repeatedly press the FONT button. The lighted indicator shows the font selected.

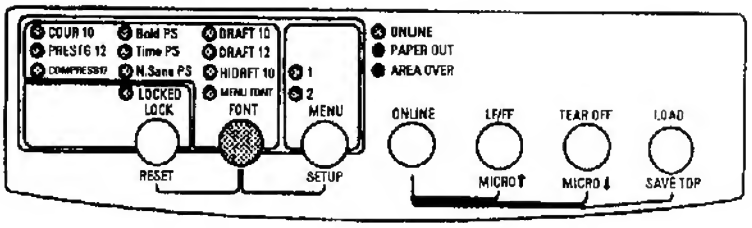

COUR 10:	Courier font at 10 cpi
PRESTG 12:	Prestige Elite font at 12 cpi
Compress 17:	Compressed font at 17 cpi
Bold PS:	Boldface font proportionally spaced
Time PS:	Timeless font proportionally spaced
N.Sans PS:	Nimbus Sans font proportionally spaced
DRAFT 10:	Draft font at 10 cpi
DRAFT 12:	Draft font at 12 cpi
HIDRFT 10:	High-speed Draft font at 10 cpi
MENU FONT:	Font, quality, and pitch selected in MENU 1 or 2

3. Press the ONLINE button to return online for printing. You are now ready to print using the selected menu and resident font.

Locking the selected resident font

Your software often overrides the printer settings. You can use the control panel to prevent the selected resident font from being changed by the software. To retain the selected resident font:

1. Make sure that the printer is offline.

2. Press the LOCK button to light the LOCKED indicator. This indicator shows that the printer ignores font commands from the computer.

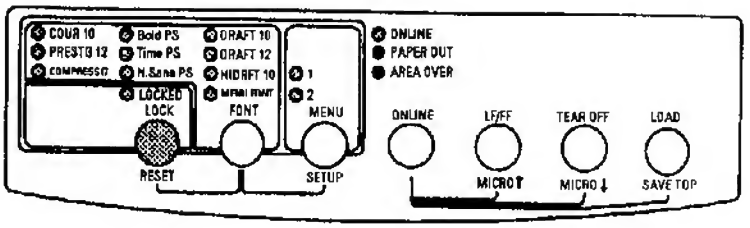

3. Press the ONLINE button to return online for printing. You are now ready to print keeping the selected resident font fixed.

STARTING OR STOPPING PRINTING

Starting Printing

Before you start to print, make sure that paper is loaded. Also, verify that the paper thickness lever is set to the appropriate position (**1** to **D**).

To start printing, press the ONLINE button to place the printer online. Then start your software.

Stopping Printing

To stop printing immediately, press the ONLINE button to place the printer offline. You can also use your software to stop printing, but there will be a slight delay before printing stops. Any data sent to the print buffer but not yet printed is stored until you resume printing. Data in the print buffer is lost if you turn the printer off.

To resume printing, press the ONLINE button again. To cancel printing, use the cancel commands provided by your software or computer. To clear the print buffer, place the printer offline and press the LOCK and FONT buttons. Any data sent to the print buffer before you canceled printing will be lost.

Resuming from a Paper-Out

The printer can "sense" when paper runs out. Depending upon how PPR-OUT (paper-out) is set in setup mode, the printer either:

- Stops printing and lights the red PAPER OUT indicator, or
- Continues printing until no more data remains in the printer.

See Chapter 5 for details on setting PPR-OUT. The factory default is to stop printing if continuous forms paper runs out and to continue printing if single sheet paper runs out.

When the cut sheet feeder runs out of paper, the printer always stops printing, regardless of the PPR-OUT setting.

To resume printing when paper runs out, use either of the methods described below:

Printing the remaining lines on a page

This method is convenient to continue printing under the paper out condition, but is not available when the cut sheet feeder is used.

1. Press the ONLINE button. The printer returns to online mode, prints or feeds one line, and the PAPER OUT indicator lights up again.

2. Repeat this procedure until the full page is printed. Line spacings, however, may be uneven.

CAUTION
When using the cut sheet stand or when printing remaining lines, be careful not to print on the platen. Printing on the platen may damage both the platen and the print head.

Continuing printing after supplying paper

1. Install paper on the forms tractors, on the cut sheet stand, or in the cut sheet feeder bin, as described in Chapter 3.
2. To load the first sheet of paper, press the LOAD button. The PAPER OUT indicator will turn off.
3. Press the ONLINE button to place the printer online. The printer resumes printing.

   NOTE
   For continuous forms paper, the page where printing stopped and the page where printing resumes may be incorrectly printed. In this case, wait for the entire job to finish printing. Then reprint the incorrect pages.

Resuming from an Area Over

The printer senses the left and right edges of paper and stores their positions when the paper is loaded. If your software will print data past either edge, the printer ignores that data but does not stop printing. Rather, the AREA OVER indicator lights to call your attention to the loss of data.

The AREA OVER indicator functions when AREACNT (area control) is set to ENABLE in setup mode. See Chapter 5 for information on setting AREACNT. The factory default is not to sense the edges. If paper is dark-colored or preprinted, the printer may not be able to sense the edges correctly. In this case, disable the sensor.

To resume printing when the AREA OVER indicator is on:

1. Stop your software and press the ONLINE button to place the printer offline.
2. Adjust the horizontal position of the paper or change the margin settings in the printer setup menu or your software.
3. Press the ONLINE button to place the printer online. Restart the software from the page that includes the lost data.

REMOVING PRINTED PAGES

This section describes the best methods for removing single sheets or continuous forms paper after printing.

Removing Single Sheets

When you print using software, the printer automatically ejects each sheet of paper when the end of the printed page is reached. To eject sheets manually, use one of the following methods:

- Press and hold down the LF/FF button to execute a form feed, or
- Turn the platen knob clockwise.

Removing Continuous Forms

To avoid wasting paper, use the printer tear-off function to remove continuous forms paper. Press the TEAR OFF button to advance the perforation to the tear-off edge. Tear the paper off, and then press any button to retract the paper back to the top-of-form position. See Chapter 3 for more detailed instructions.

CLEARING THE PRINT BUFFER

Press the LOCK and FONT buttons simultaneously to clear all data from the print buffer. This method is useful when you cancel a print operation and do not want to continue printing data already sent to the printer.

This method does not change or clear MENU1 and MENU2 settings, resident font locked state, paper loading position settings, and downloaded fonts.

5

USING SETUP MODE

Your printer has two modes: normal and setup. *Normal mode* is used for everyday printer operations and is explained in Chapters 3 and 4.

Setup mode serves two purposes. It enables you to:

- Select the printer's optional settings
- Help diagnose printer problems

These setup mode functions can be done either offline, using the printer control panel (offline setup), or remotely, using a setup program in your computer system or software (online setup). Primarily, this chapter explains how to use the offline setup mode. The online setup mode, which is reviewed briefly at the end of this chapter, is valid in all emulations. For details, refer to the programmer's manuals.

Optional settings on the printer include the emulation, fonts, pitch, page length and page width, serial interface options, and the top-of-form setting. When you save your settings in the printer's permanent memory, they become the new settings or defaults. These defaults are invoked whenever you turn on the printer. For example, if you save DPL24C PLUS as the default emulation, DPL24C PLUS is invoked when you turn on the printer.

The printer diagnostic functions are SELF-TST, HEX-DUMP, and V-ALMNT. These functions are helpful for printer trouble-shooting, as described in Chapter 7.

HOW TO USE THIS CHAPTER

The sections in this chapter are presented in logical sequence. *If you are a first-time user,* be sure to read the following sections *first:*

- Entering Setup Mode
- Overview of Setup Mode

These sections will familiarize you with how setup mode works. Once you understand the basics, use the following sections to select printer options that are compatible with your computer system's hardware and software setup:

- Printing a List of Selected Options
- Deciding Which Options to Change
- Changing MENU1 and MENU2 Options
- Changing Hardware Options
- Changing Print Position Adjustment Options
- Changing Configuration Options
- Exiting and Saving

To restore the printer default settings (factory defaults or power-on defaults), see the section **Resetting Defaults** later in this chapter.

For information on using the SELF-TST, HEX-DUMP, and V-ALMNT functions, see the section **Using the Diagnostic Functions** later in this chapter.

For Experienced Users:

Once you are familiar with setup mode, you may want to use the flowchart at the end of this chapter for quick reference. The flowchart lists all printer setup functions, items, and options.

ENTERING SETUP MODE

Before entering setup mode, load continuous forms paper into the printer as described in Chapter 3. Several sheets of paper may be required to make all of your setup mode selections.

To enter setup mode, follow these steps:

1. Make sure that continuous forms paper is loaded and that the paper select lever is set backward.

2. Press the ONLINE button to place the printer offline.

3. Press the FONT and MENU buttons simultaneously until the printer beeps.

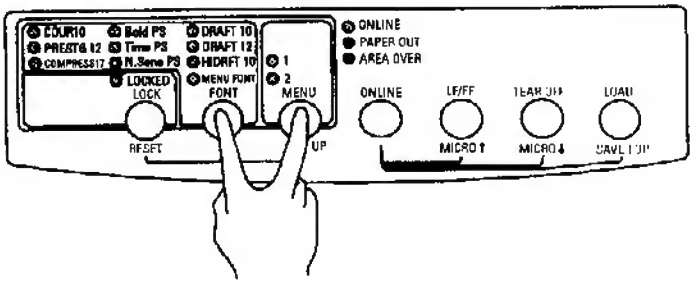

Entering setup mode

If you do not hear a beep or hear an alarm beep (beeps four times), you are not in setup mode. Place the printer offline and try again.

4. When the printer enters offline setup mode, it prints the following information.

```
*** OFFLINE SETUP MODE ***

- Red cursor indicates the option to be selected.
- The selected option is underlined.
- "SAVE&END" function must be selected to exit setup mode.
- Following list shows how buttons function in setup mode:


BUTTON| ACTION on <<FUNCTION>> menu|  ACTION on <ITEM> menu
------+-------------------------+-------------------------------
ONLINE|Reprint <<FUNCTION>> menu   |Select option & return to <<FUNCTION>> menu
 FONT |Select function            |Select option & print next item
 MENU |Select function            |Select option & print previous item
 LOCK |Move cursor to next function|Move cursor to next option
```


Initial printout in setup mode

Setup Mode

The initial printout contains a header, help menu, and <<FUNCTION>> menu. The header tells you that the printer is offline and in setup mode. The help menu provides a quick summary of how to use setup mode. The <<FUNCTION>> menu lists all of the functions available to you in setup mode. Note that the red cursor on the plastic print guide is initially positioned below the SAVE & END function.

Setup mode can also be entered by turning off the printer, then turning the printer back on while pressing the FONT and MENU buttons simultaneously until the printer beeps.

OVERVIEW OF SETUP MODE

When you enter setup mode, the following <<FUNCTION>> menu is printed:

```
<<FUNCTION>>
  SAVE&END  MENU1  MENU2  HARDWRE  ADJUST  CONFIG  DEFAULT  LIST  SELF-TST  HEX-DUMP
  V-ALMNT
```

Table 5.1 summarizes the purpose of each function.

Table 5.1 Setup Mode Functions

Function	Purpose
SAVE & END	Exits setup mode and saves any changes made while in setup mode.
MENU1 and MENU2	Assigns print features to MENU1 and MENU2 on the printer control panel.
HARDWRE	Changes the printer hardware options.
ADJUST	Changes the print position adjustment options.
CONFIG	Changes the configuration options.

Table 5.1 Setup Mode Functions (Cont.)

Function	Purpose
DEFAULT	Resets factory defaults in MENU1 and MENU2.
LIST	Prints a list of all currently selected options
SELF-TST	Runs the self-test.
HEX-DUMP	Prints hex dumps.
V-ALMNT	Checks and corrects vertical print alignment.

To select a function from the <<FUNCTION>> menu:

1. Repeatedly press the LOCK button to position the red cursor on the plastic print guide under the function you require.

2. Press the FONT button or the MENU button to select the function. If the function has items and options, the printer prints the first item and its options. The MENU1, MENU2, HARDWRE, ADJUST, and CONFIG functions contain items that have selectable options. The other functions have neither items nor options.

   The first three MENU1 items and their options are shown below. Items are enclosed in single brackets < >.

```
<EMULATE>          DPL24C+  XL24E    ESC/P2

<FONT>
 COUR 10  PRSTG12  COMPRSD  BOLDFCE  PICA 10  CORRESP  OCR B    OCR-A    COUR-N   COUR-B
 COUR-I   N.SAN-N  N.SAN-B  N.SAN-I  TIMLS-N  TIMLS B  TIMLS-I  DOWNLD0  DOWNLD1

<QUALITY>          LETTER   REPORT   DRAFT    HI-DRAFT
```

Setup Mode

To select an option from the <item> menu:

1. Repeatedly press the LOCK button to position the red cursor on the plastic print guide under the option you require.
2. Press the FONT button to select the option. The printer prints the next item and its options. You can press MENU to select the option. Then, the printer prints the previous item and its options.
3. After selecting the desired options, press the ONLINE button to reprint the <<FUNCTION>> menu.

   For each item, the short-underlined option is the current default option (the option currently saved in the printer's permanent memory). In the previous example, the default options are Fujitsu DPL24C PLUS emulation, Courier 10 font, and letter print quality.

The chart on the next page summarizes how to select options such as emulation, font, and print quality and how to use functions that do not have options.

Setup Mode Example

To become familiar with setup mode, try the following example. This example shows how to change the font and pitch in MENU2 to Prestige Elite 12 and 12 cpi.

1. **Load continuous forms paper.**
2. **Enter setup mode.**

   Press the FONT and MENU buttons simultaneously until the printer beeps.
3. **Select the MENU2 function.**

   Wait for the printer to stop printing and press the LOCK button twice to position the red cursor on the print guide under MENU2. Press the FONT button or the MENU button to select the MENU2 function and print the <EMULATE> item and its options.

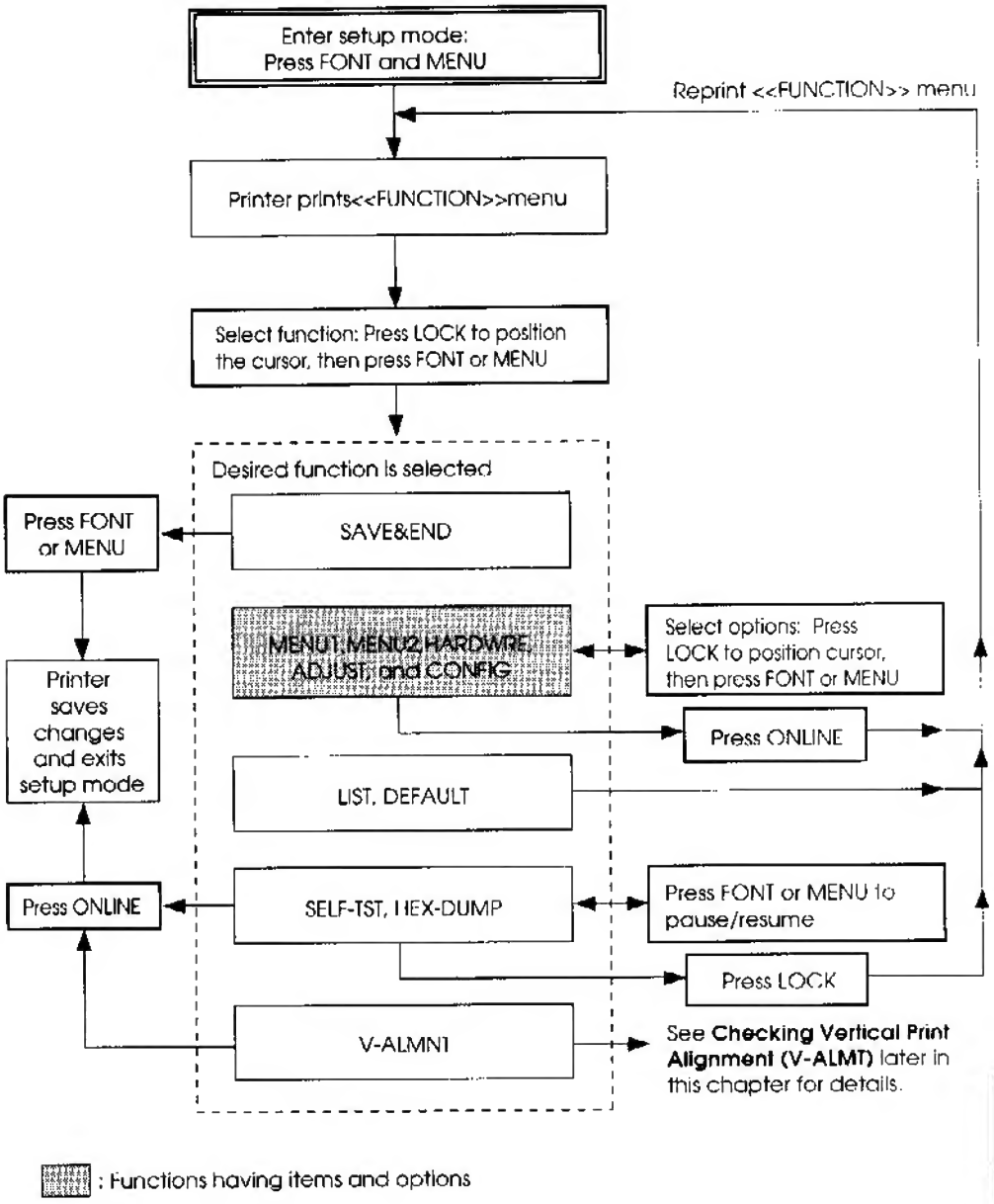

Summary of setup mode

Setup Mode

4. **Select the current emulation.**

   Since you do not want to change the emulation, press the FONT button to select the current emulation and print the next item, <FONT> and its options.

5. **Change the font to Prestige Elite 12.**

   Press the LOCK button once to position the cursor beneath PRSTG12. Press the FONT button to select PRSTG12 and print the next item, <QUALITY>, and its options.

6. **Select the current print quality.**

   Since you do not want to change the print quality, press the FONT button to select the current print quality and print the next item, <PITCH>, and its options.

7. **Change the pitch to 12 cpi and exit the MENU2 function.**

   Press the LOCK button once to position the cursor under 12 CPI. Since you do not want to make any other changes in MENU2, press the ONLINE button to select 12 CPI and exit MENU2. The <<FUNCTION>> menu is then reprinted.

8. **Exit setup mode, saving the new font and pitch.**

   Since the cursor is under SAVE & END, press the FONT button or the MENU button to select SAVE & END. The printer saves Prestige Elite 12 and 12 cpi as the new power-on defaults in MENU2. The printer then exits setup mode and returns online. These settings remain in effect until changed.

Points to Remember

- Load continuous forms paper *before entering setup mode*. In setup mode, the LF/FF button cannot be used to feed paper. To adjust the line position of paper in setup mode, use the platen knob.

- Whenever you enter setup mode, short help menus are printed at the top of the page. Help menus are also printed when you select the SELF-TST, HEX-DUMP, or V-ALMNT functions. Use help menus for quick reference while in setup mode.

- When printing the items and options for each function, you can only print one item at a time. However, you can move either forward or backward in the item list. To move forward (print the next item), press the FONT button. To move backward (print the previous item), press the MENU button.

- While in the <<FUNCTION>> menu or when selecting a function that contains items and selectable options, press the ONLINE button to reprint the <<FUNCTION>> menu.

- A short underline under the first two letters of an option indicates that it is the current default setting. For example, 12 CPI indicates that 12 characters per inch is the default pitch. To change the default, select and save a new pitch setting.

- While in setup mode, you can use the LIST function to print out a list of the currently selected options (see the next section for details).

- To exit setup mode and permanently save your changes, select either the SAVE & END function. For details, see the section **Exiting and Saving** later in this chapter. To exit setup mode without saving your changes, turn the printer off. Your previous power-on defaults are active when you turn the printer on again.

PRINTING A LIST OF SELECTED OPTIONS

The LIST function prints a list of all the printer's currently selected options. This function is useful for checking the printer settings when you first enter setup mode or just before you exit. To print a list of options, load continuous forms paper and then proceed as follows:

1. **Enter setup mode.**

   Press the FONT button and the MENU button simultaneously until the printer beeps. Wait for the printer to stop printing and check that the following <<FUNCTION>> menu is printed:

```
<<FUNCTION>>
  SAVE&END  MENU1  MENU2  HARDWRE  ADJUST  CONFIG  DEFAULT  LIST  SELF-TST  HEX-DUMP
  V-ALMNT
```

2. **Select the LIST function.**

   Repeatedly press the LOCK button to position the red cursor under LIST. Next press the FONT button or the MENU button to select the LIST function. The printer starts to print a list of the currently selected options. The preselected factory settings, also called factory defaults, are shown on the opposite page.

   When the printer finishes printing the list of options, it reprints the <<FUNCTION>> menu.

   NOTE
   To remove the printout, turn the platen knob until the paper can be torn off at the perforation. In setup mode, you cannot use the printer tear-off feature (TEAR OFF button).

3. **Do either of the following:**

   - Select another function, or
   - Exit setup mode, saving any changes you made.

   For details about other functions, see the other sections in this chapter. To exit setup mode and save your changes, make sure that the red cursor is positioned beneath SAVE & END, then press the FONT button or the MENU button.

```
*** Setup Parameters ***

<< Menu 1 settings >>
-------------------------
 Func.  |Item    |Option
-------------------------
 MENU1  |EMULATE |DPL24C+
 MENU1  |FONT    |COUR 10
 MENU1  |QUALITY |LETTER
 MENU1  |PITCH   |10 CPI
 MENU1  |LINE SP |6 LPI
 MENU1  |CHAR-W  |NORMAL
 MENU1  |CHAR-H  |NORMAL
 MENU1  |ATTRIB  |NONE
 MENU1  |PAGE LG |11.0 IN
 MENU1  |COLOR   |AUTOSEL
 MENU1  |LFT-END |1  COLM
 MENU1  |TOP-MRG |1  LINE
 MENU1  |LANGUGE |PAGE437
 MENU1  |CHR-SET |SET2
 MENU1  |PRF-SKP |NO-SKIP
 MENU1  |WIDTH   |13.6 IN
 MENU1  |ZEROFNT |NO-SLSH
 MENU1  |DC3-CDE |ENABLE
 MENU1  |CR-CODE |CR ONLY
 MENU1  |LF-CODE |LF & CR
 MENU1  |RGHTEND |WRAP
 MENU1  |==END== |
-------------------------

<< Menu 2 settings >>
-------------------------
 Func.  |Item    |Option
-------------------------
 MENU2  |EMULATE |DPL24C+
 MENU2  |FONT    |COUR 10
 MENU2  |QUALITY |LETTER
 MENU2  |PITCH   |10 CPI
 MENU2  |LINE SP |6 LPI
 MENU2  |CHAR-W  |NORMAL
 MENU2  |CHAR-H  |NORMAL
 MENU2  |ATTRIB  |NONE
 MENU2  |PAGE LG |11.0 IN
 MENU2  |COLOR   |AUTOSEL
 MENU2  |LFT-END |1  COLM
 MENU2  |TOP-MRG |1  LINE
 MENU2  |LANGUGE |PAGE437
 MENU2  |CHR-SET |SET2
 MENU2  |PRF-SKP |NO-SKIP
 MENU2  |WIDTH   |13.6 IN
 MENU2  |ZEROFNT |NO-SLSH
 MENU2  |DC3-CDE |ENABLE
 MENU2  |CR-CODE |CR ONLY
 MENU2  |LF-CODE |LF & CR
 MENU2  |RGHTEND |WRAP
 MENU2  |==END== |
-------------------------

<< Hardware settings >>
-------------------------
 Func.  |Item    |Option
-------------------------
 HARDWRE|PPR-OUT |CNTONLY
 HARDWRE|PRT-DIR |BI-DIR
 HARDWRE|BUZZER  |ON
 HARDWRE|WORD-LG |8 BIT
 HARDWRE|BUFFER  | 8KBYTE
 HARDWRE|INTRFCE |AUTO-2S
 HARDWRE|FORMAT  |8NONE 1
 HARDWRE|BAUD-RT |9600
 HARDWRE|PROTOCL |XON/XOF  (*2)
 HARDWRE|DSR     |IGNORE
 HARDWRE|DUPLEX  |FULL
 HARDWRE|CTS     |DETECT
 HARDWRE|CD      |DETECT
 HARDWRE|CSFTYPE |ASF
 HARDWRE|==END== |
-------------------------

<< Adjust settings >>
-------------------------
 Func.  |Item    |Option
-------------------------
 ADJUST |CNT-ORG |6 /6 IN
 ADJUST |CNTFINE |0 /180
 ADJUST |CUT-ORG |6 /6 IN
 ADJUST |CUTFINE |0 /180
 ADJUST |CNT-LFT |0  /90
 ADJUST |CUT-LFT |0  /90
 ADJUST |CUT-ADJ |0  /360
 ADJUST |==END== |
-------------------------

<< Config settings >>
-------------------------
 Func.  |Item    |Option
-------------------------
 CONFIG |TEAROFF |MANUAL  (*3)
 CONFIG |TEARPOS |VISIBLE
 CONFIG |CUTLOAD |BUTTON  (*4)
 CONFIG |DECODE  |DIRECT
 CONFIG |AREACNT |DISABLE
 CONFIG |ON-LOAD |ONLINE
 CONFIG |LOCK    |NONE
 CONFIG |//S//   |DISABLE
 CONFIG |CONT-PE |EDGE
 CONFIG |==END== |
-------------------------
```

*1 When the color option is installed.

*2 FORMAT to CD are not printed when the serial interface option is not installed or when PARALEL option is selected for INTRFCE.

*3 TEAR-EN is printed after TEARPOS when AUTO option is selected for TEAROFF.

*4 LOADTIM is printed after this line when AUTO option is selected for CUTLOAD.

Printout of factory defaults using LIST

DECIDING WHICH OPTIONS TO CHANGE

The previous page shows a printout of the printer's factory default settings. In this printout, options are listed by functional group:

- Menu 1 settings (MENU1 function)
- Menu 2 settings (MENU2 function)
- Hardware settings (HARDWRE function)
- Print position adjustment settings (ADJUST function)
- Configuration settings (CONFIG function)

Most selectable options only alter print features, such as the typestyle, page format, and color selection. However, some options must be selected correctly for the printer to work properly with your hardware and software. For each function, Table 5.2 lists items whose options must be selected correctly for system and printer accessory compatibility.

Table 5.2 Required Options

Function	Item	Option
MENU1	EMULATE	*The emulation selected on the printer must be the same as the emulation selected in your software.* If you selected an emulation when you set up the printer (Chapter 2), you do not need to change the EMULATE option unless you want to change to a different emulation. The emulation assigned to MENU1 is the default when you turn the printer on. See the section **Changing MENU1 and MENU2 Options** later in this chapter.
MENU2	None	*If you use MENU2, the emulation selected for MENU 2 must be the same as the emulation selected in your software.* See the section **Changing MENU1 and MENU2 Options** later in this chapter.

Table 5.2 Required Options (Cont.)

Function	Item	Option
HARDWRE	FORMAT BAUD-RT PROTOCL DSR DUPLEX	*If you have a serial interface, the serial interface options selected on the printer must be the same as the settings you selected using your software or your computer operating system.* If the settings are not the same, the printer will not print or will print garbage. See the section **Changing Hardware Options** later in this chapter.
ADJUST	None	If you are not using software to specify the top margin of the page, use the printer's default top-of-form setting, 1 inch (25.4 mm) from the top of the paper. If you are using software to specify the top margin of the page, change the default setting to 1/6 inch (4.2 mm). See the section **Changing Print Position Adjustment Options** later in this chapter.
CONFIG	None	If you are using paper that is dark-colored or preprinted with dark colors, you may need to disable the AREA OVER detection function. See the section **Changing Configuration Options** later in this chapter.

CHANGING MENU1 AND MENU2 OPTIONS

The MENU1 and MENU2 functions allow you to change the print options assigned to MENU1 and MENU2 on the printer control panel. In normal (nonsetup) mode, you can easily switch between the menus for printing, as described in Chapter 4.

MENU1 is invoked when you first turn the printer on.

Select the same emulation on the printer as is selected in your software. If the emulations are not the same, the printer will not work correctly with your software. If you plan to use two different emulations on a regular basis, assign the most frequently used emulation to MENU1. Assign the second emulation to MENU2. All of the other settings available for MENU1 and MENU2 are optional. Some of the items and options will vary with the emulation.

To determine which features your software supports, refer to your software documentation. If you have a color printer, the default for <COLOR> is AUTOSEL, which allows you to specify color using your software.

Table 5.3 describes the MENU1 and MENU2 items and options. Both functions offer the same items and options. The items in Table 5.3 are listed in the order in which they are printed. Not all items are defined for all emulations and some options vary with the emulation.

The procedure for changing the MENU1 and MENU2 options is described after Table 5.3.

Table 5.3 MENU1 and MENU2 Items and Options

NOTES:
- Underlined options are the factory defaults.
- Asterisks identify items and options that differ for the IBM XL24E and Epson ESC/P2 emulations. The notes are defined at the end of the table.

MENU1 and MENU2 Items	Options	Description
<EMULATE>		Select the same emulation as is selected in your software. See the section **Selecting an Emulation in** Chapter 2 for information on selecting an emulation.
	DPL24C+	Fujitsu DL-series printers (DPL24C PLUS command set)
	XL24E ESC/P2	IBM Proprinter XL24E printers Epson printers using the ESC/P2 command set
		NOTE: When you change the emulation, all MENU1 or MENU2 options are reset to the factory defaults for that emulation.
<FONT>		For each of the following fonts, the recommended pitch settings are given after the font name. When you change the font, be sure to also change the pitch, if required.
	COUR 10	Courier, 10cpi
	PRSTG12	Prestige Elite, 12cpi
	COMPRSD	Compressed font, 15,17,and 18cpi
	BOLDFCE	Boldface, Proportional
	PICA 10	Pica, 10cpi
	CORRESP	Correspondence,10cpi
	OCR-B	OCR-B, 10cpi
	OCR-A	OCR-A, 10cpi
	COUR-N	Courier Normal, 10cpi
	COUR-B	Courier Bold, 10cpi
	COUR-I	*Courier Italic, 10cpi*
	N.SAN-N	Nimbus Sans Normal, Prop.
	N.SAN-B	**Nimbus Sans Bold, Prop.**
	N.SAN-I	*Nimbus Sans Italic, Prop.*

Setup Mode

Table 5.3 MENU1 and MENU2 Items and Options (Cont.)

NOTES:
- Underlined options are the factory defaults.
- Asterisks identify items and options that differ for the IBM XL24E and Epson ESC/P2 emulations. The notes are defined at the end of the table.

MENU1 and MENU2 Items	Options	Description
<FONT> (continued)	TIMLS-N TIMLS-B TIMLS-I DOWNLD#	**Timeless Normal, Prop.** **Timeless Bold, Prop.** ***Timeless Italic, Prop.*** Font 0 or font 1 in the printer's download RAM See Appendix F for font examples.
<QUALITY>		Select the print quality that most often meets your needs.
	LETTER	Letter print quality. This option provides the highest resolution but the slowest print speed. It cannot be used with the compressed font.
	REPORT	Report print quality. This option provides lower resolution than letter quality, but at twice the speed. If you want only the double speed, regardless of fonts, use the correspondence font. The quality of the correspondence font is higher than that of report.
	DRAFT	Regular draft print quality. This option provides lower resolution than report quality, but at 3.2 times letter speed.
	HI-DRFT	High-speed draft print quality. This option provides lower resolution than draft quality, but at 3.2 times letter speed.

Table 5.3 MENU1 and MENU2 Items and Options (Cont.)

NOTES:
- Underlined options are the factory defaults.
- Asterisks identify items and options that differ for the IBM XL24E and Epson ESC/P2 emulations. The notes are defined at the end of the table.

MENU1 and MENU2 Items	Options	Description
<PITCH>	## CPI	2.5, 3, 5, 6, 10, 12, 15, 17, 18, or 20 cpi (characters per horizontal inch)
	PROP SP	Proportional spacing (1/12 inch per character space)
<LINE SP>	## LPI	1, 2, 3, 4, 5, 6, 7, or 8 lpi (lines per vertical inch) **6 lpi** / **3 lpi (double spacing)** ABCD / ABCD ABCD ABCD / ABCD ABCD ABCD / ABCD ABCD
<CHAR-W>		Change also the pitch 2 TIMES or 4 TIMES is selected.
	NORMAL	Standard character width **ABCD**
	2 TIMES	Double character width **ABCD**
	4 TIMES (*1)	Quadruple character width **ABCD**

Setup Mode

Table 5.3 MENU1 and MENU2 Items and Options (Cont.)

NOTES:
- Underlined options are the factory defaults.
- Asterisks identify items and options that differ for the IBM XL24E and Epson ESC/P2 emulations. The notes are defined at the end of the table.

MENU1 and MENU2 Items	Options	Description
<CHAR-H>		Change also the line spacing if 2 TIMES or 4 TIMES is selected.
	NORMAL	Standard character height ABCD abcd
	2 TIMES	Double character height ABCD abcd
	4 TIMES (*1)	Quadruple character height ABCD abcd
<ATTRIB>		Selects an attribute to add emphasis to your documents. Only one attribute may be selected at a time.
	NONE	Standard characters (no attributes)
	ITALICS	*Italic printing*
	CONDNSD (*1)	Condensed printing
	SHADOW	Double printing with a slight horizontal offset
	BOLD	Double printing at the same position

Table 5.3 MENU1 and MENU2 Items and Options (Cont.)

NOTES:
- Underlined options are the factory defaults.
- Asterisks identify items and options that differ for the IBM XL24E and Epson ESC/P2 emulations. The notes are defined at the end of the table.

MENU1 and MENU2 Items	Options	Description
<PAGE LG>	## IN	Specifies the length of the page in inches. *For DPL24C PLUS and IBM XL24E emulations:* 3.0, 3.5, 4.0, 5.0, 5.5, 6.0, 7.0, 8.0, 8.5, <u>11.0</u> (letter size), 11.6 (A4 size), 12.0, 14.0, or 18.0 inches *For Epson ESC/P2 emulation:* 4.0, 4.5, 5.0, ..., <u>11.0</u>, 11.5, ..., 22.0 inches
<COLOR> (*7)		*Available only for color printers if you have the color kit option installed.*
	<u>AUTOSEL</u>	Automatic color selection. Specifies color using your software. Seven colors can be specified: black, yellow, red, blue, violet, orange, and green.
	BLACK YELLOW MAGENTA CYAN	Black Yellow Red Blue } Software specification are invalid.

Setup Mode

Table 5.3 MENU1 and MENU2 Items and Options (Cont.)

NOTES:
- Underlined options are the factory defaults.
- Asterisks identify items and options that differ for the IBM XL24E and Epson ESC/P2 emulations. The notes are defined at the end of the table.

MENU1 and MENU2 Items	Options	Description
<LFT-END>		Specifies the print start column for changing the left margin. Printing starts at the position given by this column plus your software-specified left margin.
	## COLM	Column 1, 2, 3, ..., 41 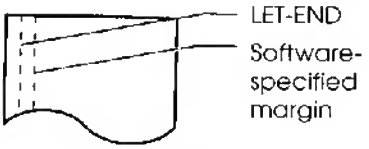
<TOP-MRG>		Specifies the number of space lines for the top margin. The resultant blank space is the <TOP-MRG> setting minus 1 line. *The total size of your top margin is the above resultant value plus the following two settings:* top-of-form (default – 1 inch) and the software-specified top margin. If you are using software to specify the top margin, use the default (1 line) for <TOP-MRG>.
	## LINE	1, 2, 3,4, 5, 6, 7, 8, 9, or 10 lines 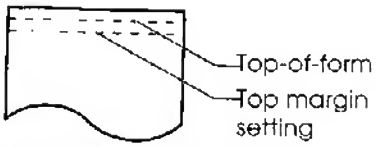

Table 5.3 MENU1 and MENU2 Items and Options (Cont.)

NOTES:
- Underlined options are the factory defaults.
- Asterisks identify items and options that differ for the IBM XL24E and Epson ESC/P2 emulations. The notes are defined at the end of the table

MENU1 and MENU2 Items	Options	Description
<LANGUGE>		Selects a language. Appendix E shows the character sets for each language. Two-pass means that diacritical marks are printed separately from their letters and that letters are printed without any reduction. The first listing is common to all emulations. Options specific to each emulation are skipped. See the subsequent listings (*3) and(*4).
	USA	American English (Same as code page 437)
	UK	British English
	GERMAN	German
	SWEDISH	Swedish
	PAGE437	Code page 437
	PAGE850	Code page 850
	PAGE860	Code page 860
	PAGE863	Code page 863
	PAGE865	Code page 865
	ECMA94	ECMA 94
	ISO8859	ISO 8859-1
	PG852	Code page 852
	PG852-T	Code page 852 two-pass
	PG855	Code page 855
	PG866	Code page 866
	HUNGARY	Hungarian
	HUNG-T	Hungarian two-pass

Table 5.3 MENU1 and MENU2 Items and Options (Cont.)

NOTES:
- Underlined options are the factory defaults.
- Asterisks identify items and options that differ for the IBM XL24E and Epson ESC/P2 emulations. The notes are defined at the end of the table.

MENU1 and MENU2 Items	Options	Description
<LANGUGE> (continued)	SLOV	Slovenian
	SLOV-T	Slovenian two-pass
	POLISH	Polish
	POLSH-T	Polish two-pass
	MAZOWIA	Mazowian
	MAZOW-T	Mazowian two-pass
	LATIN2	Latin 2
	LATIN2-T	Latin 2 two-pass
	KAMENIC	Kamenicky
	KAMEN-T	Kamenicky two-pass
	TURKY	Turkish
	TURKY-T	Turkish two-pass
	CYRILIC	Cyrillic
	IBM437	IBM 437
	IBM851	IBM 851
	ELOT928	ELOT 928
	PG-DHN	Code page DHN
	LATIN-P	Latin Polish
	ISO-LTN	ISO Latin
	LITHUA1	Lithuanian1
	LITHUA2	Lithuanian2
	MIK	
	MACEDON	Macedonian
	PG-MAC	
	ELOT927	
	ABG	
	ABY	
	DEC GR	
	HBR-OLD	
	PG862	
	HBR-DEC	
	GREEK 11	
	ISO-TUK	ISO Turkish

Table 5.3 MENU1 and MENU2 Items and Options (Cont.)

NOTES:
- Underlined options are the factory defaults.
- Asterisks identify items and options that differ for the IBM XL24E and Epson ESC/P2 emulations. The notes are defined at the end of the table.

MENU1 and MENU2 Items	Options	Description
<LANGUGE> (continued)	(*3)	
	FRENCH	French
	ITALIAN	Italian
	SPANISH	Spanish
	DANISH1	Danish I
	DANISH2	Danish II
	FINNISH	Finnish
	NORWEGN	Norwegian
	(*4)	
	DANISH1	Danish I
	ITALIAN	Italian
	SPANSH1	Spanish I
	SPANSH2	Spanish II
	JAPAN	Japanese
	NORWEGN	Norwegian
	LATIN A	Latin American
	FRENCH	French
	DANISH2	Danish II
	KOREA	Korea
	LEGAL	Legal

Table 5.3 MENU1 and MENU2 Items and Options (Cont.)

NOTES:
- Underlined options are the factory defaults.
- Asterisks identify items and options that differ for the IBM XL24E and Epson ESC/P2 emulations. The notes are defined at the end of the table.

MENU1 and MENU2 Items	Options	Description
<CHR-SET>	SET 1 SET 2	IBM character set 1 IBM character set 2 If a downloaded (soft) font is used, the character set for that font overrides the <CHR-SET> setting.
	(*4) ITALIC GRAPHIC	Italic characters are available. Graphics characters (ruled lines) are available.
<AGM> (*2)	OFF ON	Specifies that Alternate Graphics Mode (AGM) is off. The base of line spacing is 1/72 inch or 1/216 inch. Specifies that Alternate Graphics Mode (AGM) is on. The base of line spacing is 1/60 inch or 1/180 inch.
<PRF-SKP>		For continuous forms, this option specifies whether an inch is skipped around the perforation. If you are not using software to specify a bottom margin, select SKIP when using thicker, multipart forms.
	SKIP NO-SKIP	One inch is skipped around the perforation. The perforation is not skipped. Printing continues in the bottom margin of the page.

Table 5.3 MENU1 and MENU2 Items and Options (Cont.)

NOTES:
- Underlined options are the factory defaults.
- Asterisks identify items and options that differ for the IBM XL24E and Epson ESC/P2 emulations. The notes are defined at the end of the table.

MENU1 and MENU2 Items	Options	Description
<WIDTH> (*6)	13.6 IN 11.4 IN 11.0 IN 8.0 IN	13.6-inch page width 11.4-inch page width 11-inch page width 8-inch page width
<ZEROFNT> (*3)		Specifies whether to print the number zero with a slash. This is useful to distinguish the capital letter "O" from the number "0". Invalid for some soft fonts.
	NO-SLSH SLASH	0 Ø
<DC3-CDE> (*5)	ENABLE	Enables the DC1 and DC3 codes. Any data received between DC3 and the next DC1 is ignored.
	DISABLE	Disables the DC1 and DC3 codes. These codes are then ignored.
<CR-CODE>	CR ONLY	No line feed is added to a carriage return. ABCDEFGH IJKLMNOP
	CR & LF	A line feed is added to each carriage return. ABCDEFGH IJKLMNOP

Setup Mode

Table 5.3 MENU1 and MENU2 Items and Options (Cont.)

NOTES:
- Underlined options are the factory defaults.
- Asterisks identify items and options that differ for the IBM XL24E and Epson ESC/P2 emulations. The notes are defined at the end of the table.

MENU1 and MENU2 Items	Options	Description
<LF-CODE> (*3)	LF ONLY	No carriage return is added to a line feed. ABCDEFGH IJKLMNOP
	LF & CR	A carriage return is added to each line feed. ABCDEFGH IJKLMNOP
<RGHTEND>	WRAP	End-of-line wrap. Causes a carriage return plus a line feed. ABCD EFGH
	OVR-PRT	Characters are overprinted at the end of a line. ABCE
<==END==>		Indicates the end of MENU1 items. Press the FONT button to print the first item, <EMULATE>. Press the MENU button to print the previous item, <RGHTEND>. Press the ONLINE button to reprint the <<FUNCTION>> menu.

*1 Unavailable in the IBM XL24E emulation
*2 Available *only* in the IBM XL24E emulation
*3 Unavailable in the Epson ESC/P2 emulations
*4 Available *only* in the Epson ESC/P2 emulations
*5 Available *only* in the DPL24C+ emulation
*6 Available *only* for 136-column printer
*7 When the color option installed

Procedure

To change the options assigned to MENU1 or MENU2, make sure that continuous forms paper is loaded and then proceed as follows:

1. **Enter setup mode.**

   Press the FONT button and the MENU button simultaneously until the printer beeps. Wait for the printer to stop printing. The following <<FUNCTION>> menu is printed:

```
<<FUNCTION>>
  SAVE&END  MENU1  MENU2  HARDWRE  ADJUST  CONFIG  DEFAULT  LIST  SELF TST  HEX-DUMP
  V-ALMNT
```

2. **Select the MENU1 or MENU2 function.**

   Repeatedly press the LOCK button to position the red cursor under either the MENU1 or MENU2 function. Press the FONT button or the MENU button to select the function and print the following <EMULATE> options:

```
<EMULATE>      DPL24C+   XL24E    ESC/P2
```

3. **Select an emulation.**

   Repeatedly press the LOCK button to position the cursor under the emulation you require. Then do either of the following:

   - Press the FONT button to select the emulation and print the next MENU1 or MENU2 item. (As shown in Table 5.3, this is the <FONT> item).
   - Press the MENU button to select the emulation and print <==END==>. Press the MENU button again to print the last MENU1 or MENU2 item. (As shown in Table 5.3, this is the <RGHTEND> item). The MENU button is convenient when the options you need to change are near the end of the list of items.

NOTE
Whenever you select a new emulation, all MENU1 or MENU2 options are reset to the factory defaults for that emulation.

4. **If necessary, change the other MENU1 or MENU2 options.**

   Press the LOCK button to move the cursor to the option you want to select. Press the FONT button to select the option and print the next item listed in Table 5.3. Press the MENU button to select the option and print the previous item.

5. **Exit MENU1 or MENU2.**

   Press the ONLINE button to exit the selected function and reprint the <<FUNCTION>> menu.

6. **Do either of the following:**

   - **Select another function, or**
   - **Exit setup mode, saving your changes.**

   For details about other functions, see the other sections in this chapter. To exit setup mode and save your changes, make sure the red cursor is positioned beneath SAVE & END, and then press the FONT button or the MENU button.

Resetting MENU1 and MENU2

To reset the factory defaults for both MENU1 and MENU2, select the DEFAULT function. For more information, see the section **Resetting Defaults** later in this chapter. The DEFAULT function cannot reset those options which are handled by the HARDWRE, ADJUST, and CONFIG functions.

CHANGING HARDWARE OPTIONS

The HARDWRE function defines the printer's hardware operating conditions. If you are using the optional RS-232C serial interface, the serial interface options must be set properly for the printer to function correctly with your system hardware.

Table 5.4 describes the HARDWRE items and options . Items are listed in the order in which they are printed. The procedure for changing the hardware options is described after Table 5.4.

Table 5.4 HARDWRE Items and Options

NOTE: Underlined options are the factory defaults.

HARDWRE Items	Options	Description
<PPR-OUT>		Specifies how the printer responds when you run out of paper.
	CNTONLY	The printer detects paper-out only for continuous forms. Printing stops and the PAPER OUT indicator lights red.
	DETECT	The printer detects paper-out for both continuous forms and single sheets. Printing stops and the PAPER OUT indicator lights red.
	IGNORE	The printer ignores paper-out for both continuous forms and single sheets. Printing continues until no more data remains. No PAPER OUT warning is displayed.
		NOTE: For cut sheet feeders, printing stops and the PAPER OUT indicator lights red, regardless of the PPR-OUT setting.

Setup Mode

Table 5.4 HARDWRE Items and Options (Cont.)

NOTE: Underlined options are the factory defaults.

HARDWRE Items	Options	Description
<PRT-DIR>	BI-DIR	Bidirectional printing. The printer prints in either direction while seeking the next print direction for a shorter print time.
	UNI-DIR	Unidirectional printing. Unidirectional printing is used for printing vertical lines in tables even if vertical alignment is not adjusted. Unidirectional printing is slower than bidirectional printing.
<BUZZER>		Enables or disables the printer status buzzer.
	ON	Buzzer on (recommended). The printer beeps to indicate paper-out or other conditions.
	OFF	Buzzer off under any conditions.
<WORD-LG>		To determine the required word length, refer to your computer documentation. Select 8-BIT to print bit image graphics.
	8 BIT	8-bit word length (used by most computers)
	7 BIT	7-bit word length (MSB = 0)
<BUFFER>		Assigns buffer memory to input data and downloaded font data.
		Print buffer / **Download buffer**
	NONE	0 byte / 128K bytes
	256BYTE	256 bytes / 127.75K bytes
	2KBYTE	2K bytes / 126K bytes
	8KBYTE	8K bytes / 120K bytes
	24KBYTE	24K bytes / 104K bytes
	32KBYTE	32K bytes / 96K bytes
	96KBYTE	96K bytes / 32K bytes
	128KBYT	128K bytes / 0K bytes

Table 5.4 HARDWRE Items and Options (Cont.)

NOTE: Underlined options are the factory defaults.

HARDWRE Items	Options	Description
<BUFFER> (continued)		**NOTE:** • **0BYTE option is recommended only for graphics application.** • **With 128KB selected, the printer cannot accept any download font data.**
<INTRFCE>		Selects the type of the interface to the computer.
	PARALEL	Centronics parallel interface
	SERIAL	RS-232C serial interface
	<u>AUTO-2S</u>	Auto interface selection mode
	AUTO-4S	• Both interfaces are ready for communication.
	AUTO-6S	
	AUTO-10S	• Specify the timing regarding the selected interface as being inactive.
	AUTO-15S	
	AUTO-20S	

Serial Interface Items. The following <FORMAT> to <DUPLEX> items are not printed when you select the PARALEL option for the <INTRFCE> item. Be sure that the options selected on the printer are the same as the options selected using your computer operating system or your software. Refer to the documentation provided for your computer and software.

<FORMAT>		Number of data bits	Parity bit	Number of stop bits
	<u>8NONE 1</u>	8	None	1
	8NONE 2	8	None	2
	8EVEN 1	8	Even	1
	8ODD 1	8	Odd	1
	7EVEN 1	7	Even	1
	7ODD 1	7	Odd	1
	7MARK 1	7	Mark	1
	7SPACE 1	7	Space	1
	7EVEN 2	7	Even	2
	7ODD 2	7	Odd	2

The data format also includes a start bit. The mark is logical 1. The space is logical 0.

Setup Mode

Table 5.4 HARDWRE Items and Options (Cont.)

NOTE: Underlined options are the factory defaults.

HARDWRE Items	Options	Description
<BAUD-RT>	150 300 600 1200 2400 4800 9600 19200	The baud rate is in bps (bits per second). Select the same baud rate as used by your computer or modem.
<PROTOCL>		Indicates data transmission protocol.
	XON/XOF	The DC1 and DC3 codes are used.
	DTR	The Data Terminal Ready signal is used.
	REV-CHL	The Reverse Channel signal is used.
<DSR>	IGNORE	DSR is ignored by the printer.
	DETECT	DSR is detected by the printer.
<DUPLEX>	FULL	Simultaneous data transmission occurs in opposite directions.
	HALF	Data transmission occurs in either direction, but not simultaneously.
<CTS>	IGNORE	CTS is ignored by the printer.
	DETECT	CTS is detected by the printer.
<CD>	IGNORE	CD is ignored by the printer.
	DETECT	CD is detected by the printer.
<CSFTYPE>		Selection of cut sheet feeder type
	ASF	CSF made by BDT.
	PAPRPRO	CSF made by Rutis Hauser.
<==END==>		Indicates the end of the HARDWRE item list. Press the FONT button to print the first item, which is <PPR-OUT>. Press the MENU button to print the previous item. Press the ONLINE button to reprint the <<FUNCTION>> menu.

Procedure

To change the printer's hardware options, make sure that continuous forms are loaded and then proceed as follows:

1. **Enter setup mode.**

   Press the FONT button and the MENU button simultaneously until the printer beeps. Wait for the printer to stop printing and check that the following <<FUNCTION>> menu is printed:

```
<<FUNCTION>>

  SAVE&END  MENU1  MENU2  HARDWRE  ADJUST  CONFIG  DEFAULT  LIST  SELF-TST  HEX-DUMP
  V-ALMNT
```

2. **Select the HARDWRE function.**

   Repeatedly press the LOCK button to position the red cursor under HARDWRE. Press the FONT button to select the HARDWRE function and print the first item and its options, as shown below:

```
<PPR-OUT>      CNTONLY   DETECT    IGNORE
```

3. **Select an option for the selected item.**

   Press the LOCK button to move the cursor to the option you require. Press the FONT button to select the option and print the next item.

   NOTE
   To print the previous item, press the MENU button.

4. **Repeat step 3 until all required options are changed.**

5. **Exit the HARDWRE function.**

   Press the ONLINE button to exit the HARDWRE function and reprint the <<FUNCTION>> menu.

6. **Do either of the following:**
   - **Select another function, or**
   - **Exit setup mode, saving your changes.**

   For details on other functions, see the other sections in this chapter. To exit setup mode and save your changes, make sure that the red cursor is positioned under SAVE/END, then press the FONT button or the MENU button.

CHANGING PRINT POSITION ADJUSTMENT OPTIONS

When you print using ruled paper, you often want to adjust the print position so that the print sits properly on the ruled lines. The ADJUST function allows you to:

- Set top-of-form position
- Fine-tune top-of-form position
- Fine-tune left print start column (left margin)
- Adjust for accumlative line spacing error in a page

The first three items are provided separately for cut single sheets and continuous forms. The last item is available for single sheets only.

The top edge of your paper is the *physical* top of the page. The *logical* top of the page, as "understood" by the printer when loading paper, is called the top-of-form. Printing starts at this position. Note that printing actually starts at the position obtained by adding the following:

- Top-of-form, default = 1 inch (25.4 mm)
- Top margin specified by your software
- Printer TOP-MRG (top margin setting), default = 1 line

Table 5.5 describes the ADJUT items and options. Items are listed in the order they are printed. The procedure for changing top-of-form is described after Table 5.5.

Table 5.5 ADJUST Items and Options

NOTE: Underlined options are the factory defaults.

ADJUST Items	Options	Description
<CNT-ORG>	1/6 IN : 6/6 IN : 66/6 IN	Sets the top-of-form for continuous forms in increments of 1/6 inch (4.2 mm) from the physical top of the page. The default is recommended if your top margin is not software-specified. A setting of 1/6 inch is preferable when your top margin is software-specified.
<CNTFINE>	0/180, ..., 29/180	Fine-tunes the top-of-form position for continuous forms. Increases top-of-form in increments of 1/180 inch (0.14 mm).
<CUT-ORG>	1/6 IN : 6/6 IN : 66/6 IN	Sets the top-of-form for single sheets in increments of 1/6 inch (4.2 mm) from the physical top of the page. The default is recommended if your top margin is not software-specified. A setting of 1/6 inch is preferable when your top margin is software-specified.
<CUTFINE>	0/180, ..., 29/180	Fine-tunes the top-of-form position for single sheets. Increases top-of-form in increments of 1/180 inch (0.14 mm).

Table 5.5 ADJUST Items and Options (Cont.)

NOTE: Underlined options are the factory defaults.

ADJUST Items	Options	Description
<CNT-LFT>	–10/90, ..., 0/90, ..., 10/90	Fine-tunes the left print start position for continuous forms. Moves the position left or right in increments of 1/90 inch (0.28 mm).
<CUT-LFT>	–10/90, ..., 0/90, ..., 10/90	Fine-tunes the left print start position for single sheets. Moves the position left or right in increments of 1/90 inch (0.28 mm).
<CUT-ADJ>	–22/360, ..., 0/360, ..., 22/360	Compensates the line spacing pitch on the basis of the spacing error accumulated for feeding single sheets by10 inches. Decreases or increases in increments of 1/360 inch in total.
<==END==>		Indicates the end of the ADJUST item list. Press FONT to print the first item, which is <CNT-ORG>. Press MENU to print the last item, which is <CUT-ADJ>. Press ONLINE to reprint the <<FUNCTION>> menu.

Procedure

Before adjusting a print position, you should carefully measure the amount of adjustment required for any paper that demands precise print registration. To adjust a print position, make sure that continuous forms paper is loaded. The following example shows how to adjust the top-of-form setting for continuous forms.

1. **Enter setup mode.**

   Press the FONT button and the MENU button simultaneously until the printer beeps. Wait for the printer to stop printing and check that the following <<FUNCTION>> menu is printed:

```
<<FUNCTION>>
  SAVE&END  MENU1  MENU2  HARDWRE  ADJUST  CONFIG  DEFAULT  LIST   SELF-TST  HEX-DUMP
  V ALMNT
```

2. **Select the ADJUST function.**

   Repeatedly press the LOCK button to position the red cursor under ADJUST. Press the FONT button or the MENU button to select the ADJUST function and print the following <CNT-ORG> options:

```
<CNT-ORG>
 1/6IN   2/6IN   3/6IN   4/6IN   5/6IN   6/6IN   7/6IN   8/6IN   9/6IN   10/6IN
 11/6IN   ....
```

3. **Select an option from 1/6IN to 66/6IN.**

   Press the LOCK button to move the cursor to the required option. Press the FONT button to select the option and print the <CNTFINE> item. If necessary, fine-tune the top-of-form position now. Otherwise, go to step 4.

4. **Exit the ADJUST function.**

   Press the ONLINE button to exit the ADJUST function and reprint the <<FUNCTION>> menu.

Setup Mode

5. **Exit setup mode, saving the top-of-form setting.**

   Make sure that the red cursor is positioned beneath SAVE & END, then press the FONT button or the MENU button.

6. **Check the top-of-form setting.**

   Load your paper and check the adjustment by printing a sample page using your software. If necessary, reenter setup mode and fine-tune the top-of-form position by changing the <CNTFINE> option.

CHANGING CONFIGURATION OPTIONS

The CONFIG function defines the printer's primary configuration. You can set the following options to ensure that the printer meets your requirements:

- Tear off for continuous forms
- Autoloading of single sheets
- Direct decoding of certain commands
- Enabling of the AREA OVER indicator

Table 5.6 describes the CONFIG items and options. Items are listed in the order they are printed. The procedure for changing the configuration options is described after Table 5.6.

Table 5.6 CONFIG Items and Options

NOTE: Underlined options are the factory defaults.

CONFIG Items	Options	Description
<TEAROFF>	<u>MANUAL</u>	Auto or manual tearoff feed. Automatic tearoff feed is invalid, and tearoff feed must be done using the TEAR OFF button.
	AUTO	Automatic tearoff feed is valid but only for continuous forms. Tearoff feed can also be done using the TEAR OFF button.

Table 5.6 CONFIG Items and Options (Cont.)

NOTE: Underlined options are the factory defaults.

CONFIG Items	Options	Description
<TEARPOS>	 VISIBLE ALWAYS	Tearoff position. Select this option when your software positions forms to the next top-of-form after printing the last data. The printer performs tearoff feed without adding a form feed when data transfer has stopped. Select this option when your software stops after printing the last data. The printer performs tearoff feed after adding a form feed when data transfer has stopped. **Note: For both settings, tearoff positioning will fail if the page length setting does not match the actual perforation spacing.**
The following <TEAR-EN> item is printed when TEAROFF:AUTO is specified for the <TEAROFF> item.		
<TEAR-EN>	 0 SEC 1 SEC 2 SEC 4 SEC 6 SEC	Tearoff enabled time (offset time). The offset time is from when data transfer stops to when the printer performs automatic tearoff feed. If the printer receives data again within the offset time, the printer does not perform automatic tearoff feed.

Setup Mode

Table 5.6 CONFIG Items and Options (Cont.)

NOTE: Underlined options are the factory defaults.

CONFIG Items	Options	Description
<TEAR-EN> (continued)		In some application programs, data transfer may stop temporarily due to internal processing. This setting can avoid an undesired tearoff feed by waiting for up to six seconds each time data transfer stops.
<CUTLOAD>	AUTO BUTTON	Single sheet autoloading. Single sheet paper is automatically loaded a certain time after you set the paper. Single sheet paper can be loaded by pressing the LOAD button.
The following <LOADTIM> item is printed when CUTLOAD:AUTO is specified for the <CUTLOAD> item.		
<LOADTIM>	0.5, 1.0, 1.5, 2.0 2.5, 3.0SEC	Autoload start time. Autoloading starts when this amount of time passes after you set single sheet paper.
<DECODE>	DIRECT QUEUED	Command decode timing. The printer decodes certain commands immediately after receiving data. Example: ESC SUB I, ESC CR P (DPL24C+) ESC Q # (IBM XL24E) The printer decodes commands after storing all data (including commands) in the input buffer. This speeds data reception because the printer does not require decoding time during data reception.

Table 5.6 CONFIG Items and Options (Cont.)

NOTE: Underlined options are the factory defaults.

CONFIG Items	Options	Description
<AREACNT>		Area-over detection control.
	ENABLE	Detects the left and right edges of paper when loading the paper. The printer does not print data beyond the edges, but turns on the AREA OVER indicator.
	DISABLE	Does not detect the edges. Select this option when you are using colored or preprinted paper.
<ON-LOAD>		Printer status after loading paper in offline mode.
	OFFLINE	Remains offline after paper loading.
	ONLINE	Goes into online after paper loading.
<LOCK>		Lock function of setup mode.
	NONE	Enables all buttons on the control panel.
	SETUP	Disables the setup-related buttons to keep the printer from entering setup mode during the offline state.
	ALL	Disables the setup-rlated buttons and the LOCK, FONT, and MENU buttons.
<//S//>		Effectiveness of the Cut Sheet Selection command (//S//).
	DISABLE	Makes the command ineffective.
	ENABLE	Makes the command effective.
		Note: The Cut Sheet Selection command (//S//) changes the paper source to the paper table and waits for manual insertion of a cut sheet.

Setup Mode

Table 5.6 CONFIG Items and Options (Cont.)

NOTE: Underlined options are the factory defaults.

CONFIG Items	Options	Description
<CONT-PE>	TRACTOR EDGE	Detection of end of continuous forms. Paper end is detected by the sensor on the tractor unit. Paper-end unprinted area: Continuous forms: About 80 mm Botom feeding: About 35 mm Regardless of paper end, printing continues near to the edge of paper. Paper-end unprinted area: About 4.7 mm for both continuous forms and bottom feeding
<==END==>		Indicates the end of the CONFIG item list. Press the FONT button to print the first item, which is <TEAROFF>. Press the MENU button to print the previous item. Press the ONLINE button to reprint the <<FUNCTION>> menu.

Procedure

To change the printer configuration options, make sure that continuous forms paper is loaded and then proceed as follows:

1. **Enter setup mode.**

   Press the FONT button and the MENU button simultaneously until the printer beeps. Wait for the printer to stop printing and check that the following <<FUNCTION>> menu is printed:

```
<<FUNCTION>>
  SAVE&END  MENU1  MENU2  HARDWRE  ADJUST  CONFIG  DEFAULT  LIST   SELF-TST  HEX DUMP
  V-ALMNT
```

2. **Select the CONFIG function.**

   Repeatedly press the LOCK button to position the red cursor under CONFIG. Press the FONT button to select the CONFIG function and print the following <TEAROFF> options:

```
<TEAROFF>        MANUAL    AUTO
```

3. **Select an option.**

   Press the LOCK button to move the cursor to either MANUAL or AUTO. Press the FONT button to select the option and print the <TEARPOS> item. If other items must be specified, do so now. Otherwise, go to step 4.

4. **Exit the CONFIG function.**

   Press the ONLINE button to exit the CONFIG function and reprint the <<FUNCTION>> menu.

5. **Do either of the following:**

   - **Select another function, or**
   - **Exit setup mode, saving your changes.**

   For details on other functions, see the other sections in this chapter. To exit setup mode and save your changes, make sure that the red cursor is positioned under SAVE & END, then press the FONT button or the MENU button.

EXITING AND SAVING

This section describes how to exit set up mode save any changes you made:

To exit setup mode immediately, select the SAVE & END function.

Any settings changed while in setup mode are saved as the new power-on defaults for the printer. The new defaults remain active until you change them again.

NOTE
The only way to exit setup mode without saving your changes is to turn off the printer. When you turn the printer back on, the previous default settings are used.

Procedure

To exit setup mode and save your changes using SAVE/END, proceed as follows:

1. **Print the <<FUNCTION>> menu.**

   The <<FUNCTION>> menu should be the last printed line on the page. If the menu is not printed, press the ONLINE button to print the menu. If you are using the SELF-TST or HEX-DUMP function, press the LOCK button instead of the ONLINE button to print the menu. The <<FUNCTION>> menu is shown below.

```
<<FUNCTION>>
  SAVE&END  MENU1  MENU2  HARDWRE  ADJUST  CONFIG  DEFAULT  LIST  SELF-TST  HEX-DUMP
  V-ALMNT
```

2. **Select the SAVE/END function.**

   Make sure that the red cursor is positioned under SAVE & END. Press the FONT button or the MENU button to select SAVE & END. The printer exits setup mode and returns online (the ONLINE indicator lights green). Any changes you made while in setup mode are saved.

RESETTING DEFAULTS

This section describes how to reset the printer's power-on defaults, all of the factory defaults, or the factory defaults only for MENU1 and MENU2.

Resetting Power-On Defaults

Power-on defaults are the settings saved in the printer's permanent memory. The defaults are enabled whenever you turn the printer on. The easiest way to reset the power-on defaults is to turn the printer off and then on again. This method is useful if you have made changes in setup mode that you do not want to save.

Resetting Factory Defaults

Factory defaults are those settings preselected at the factory. For a list of the printer's factory defaults, see the section **Printing a List of Selected Options** earlier in this chapter. To reset the factory defaults for all functions, proceed as follows:

1. Turn off the printer.

2. While pressing the LOCK, FONT, and MENU buttons, turn on the printer. Continue to press all three buttons until the printer beeps.

   The factory defaults are now reset.

Resetting Factory Defaults in MENU1 and MENU2

This method resets factory defaults for MENU1 and MENU2 options, listed in Table 5.3, but does not reset the printer hardware, print position adjustment, and configuration options. To reset the factory defaults in MENU1 and MENU2, proceed as follows:

1. **Enter setup mode.**

   Press the FONT button and the MENU button simultaneously until the printer beeps. Wait for the printer to stop printing and check that the following <<FUNCTION>> menu is printed:

```
<<FUNCTION>>
 SAVE&END  MENU1  MENU2  HARDWRE  ADJUST  CONFIG  DEFAULT  LIST   SELF-TST  HEX-DUMP
 V-ALMNT
```

2. **Select the DEFAULT function.**

   Repeatedly press the LOCK button to position the red cursor under DEFAULT. Press the FONT button or the MENU button to select the DEFAULT function. The printer reprints the <<FUNCTION>> menu. The default values in MENU1 and MENU2 are now reset.

3. **Do either of the following:**

   - **Select new options for MENU1 or MENU2.**
   - **Exit setup mode, saving the factory defaults.**

   See the section **Changing MENU1 and MENU2 Options**. To exit setup mode and save the new defaults, make sure that the red cursor is positioned under SAVE & END, then press the FONT button or the MENU button.

USING THE DIAGNOSTIC FUNCTIONS

This section describes how to use the following diagnostic functions:

- SELF-TST
- HEX-DUMP
- V-ALMNT

These functions are used for checking print quality and diagnosing printer problems. HEX-DUMP also provides useful information for programmers.

Printing the Self-Test

The SELF-TST function prints test pages to check how the printer operates independently of your computer. The self-test does not check the interface between the computer and the printer.

The self-test prints the printer's firmware version, its resident emulations, and all of the characters available in the currently selected character set. For color printers having a color ribbon, printing occurs in seven colors. If the DPL24C PLUS emulation is selected for MENU1, the self-test is printed using the settings currently assigned to MENU1.

Procedure

This procedure assumes that you are in setup mode. To print the self-test, make sure that continuous forms paper is loaded into the printer. Then proceed as follows:

1. **Print the <<FUNCTION>> menu.**

   The <<FUNCTION>> menu should be the last printed line on the page. If the menu is not printed, press the ONLINE button to print the menu. If you are using the HEX-DUMP function, press the LOCK button instead of the ONLINE button to print the menu. The following <<FUNCTION>> menu is printed:

```
<<FUNCTION>>
  SAVE&END  MENU1  MENU2  HARDWRE  ADJUST  CONFIG  DEFAULT  LIST   SELF-TST  HEX-DUMP
  V-ALMNT
```

2. **Select the SELF-TST function.**

   Repeatedly press the LOCK button to position the red cursor under SELF-TST, and then press the FONT button or the MENU button. The printer selects SELF-TST and starts printing. A short help menu is printed at the top of the page, followed by the self-test. Note that the printer *is not online* during self-test printing.

3. **Examine the self-test page.**

   A sample self-test page is shown in Chapter 2. To pause during self-test printing, press the FONT button or the MENU button. To resume self-test printing, press the FONT button or the MENU button again.

4. **Exit the SELF-TST function.**

   Exit the SELF-TST function in either of the following ways:

   - To exit SELF-TST and remain in setup mode, press the LOCK button. The <<FUNCTION>> menu is then re-printed.
   - To exit SELF-TST and return online, press the ONLINE button. The printer permanently saves any changes made while in setup mode and returns online.

The self-test can also be started by turning off the printer, and then pressing the LF/FF button while turning the printer back on. As described in Chapter 2, this method is useful when you first set up the printer.

Printing Hex Dumps

The HEX-DUMP function prints data and commands in hexadecimal characters and abbreviated control codes. The IBM character set 2 is used for printing (see Appendix E). The HEX-DUMP function is useful for checking whether your computer is sending the correct commands to the printer and whether the printer is executing the commands correctly. It is also useful for debugging software programs.

Procedure

To print hex dumps, make sure that continuous forms paper is loaded into the printer. Then proceed as follows:

1. **Enter setup mode.**

   Press the FONT button and the MENU button simultaneously until the printer beeps. Wait for the printer to stop printing and check that the following <<FUNCTION>> menu is printed:

```
<<FUNCTION>>
  SAVE&END  MENU1  MENU2  HARDWRE  ADJUST  CONFIG  DEFAULT  LIST   SELF-TST  HEX-DUMP
  V-ALMNT
```

2. **Select the HEX-DUMP function.**

   Repeatedly press the LOCK button to position the red cursor under HEX-DUMP, then press the FONT button or the MENU button to select the HEX-DUMP function. The printer goes *online* and prints a header and a short help menu.

3. **Print the hex dump.**

   To start hex dump printing, send your file or program to the printer. The printer goes online and prints the hex dump.

   Press the FONT button or the MENU button to pause during hex dump printing. To resume hex dump printing, press the button again.

   NOTE
   When hex dump printing stops, the printer remains online in setup mode (the ONLINE indicator is green). To print another hex dump, send another file to the printer.

```
*** Hex dump printing ***

BUTTON        ACTION
<ONLINE>      Exit to normal mode
< LOCK >      Return to <<FUNCTION>> mode
< FONT >      Pause/resume printing
< MENU >      Pause/resume printing

0  1  2  3  4  5  6  7  8  9  A  B  C  D  E  F          0123456789ABCDEF
48 65 78 20 64 75 6D 70 20 70 72 69 6E 74 69 6E         Hex dump printin
67 2E 0D 0A 0D 0A 1B 70 01 41 42 43 44 45 46 47         g.▯▯▯▯▯pABCDEFG
48 49 4A 4B 4C 4D 4E 4F 50 51 52 53 54 55 56 57         HIJKLMNOPQRSTUVW
58 59 5A 0D 0A 61 62 63 64 65 66 67 68 69 6A 6B         XYZ▯▯abcdefghijk
6C 6D 6E 6F 70 71 72 73 74 75 76 77 78 79 7A 0D         lmnopqrstuvwxyz▯
0A 30 31 32 33 34 35 36 37 38 39 0D 0A 1B 40            ▯0123456789▯▯▯@
```

Sample hex dump

4. **Exit the HEX-DUMP function.**

   Exit the HEX-DUMP function in either of the following ways:

   - To remain in setup mode, press the LOCK button. The <<FUNCTION>> menu is then reprinted. For details on other functions, see other sections in this chapter.

   - To return to online normal mode, press the ONLINE button. If you press the ONLINE button while the hex dump is printing, printing. The printer immediately switches to normal online mode. Any data that was sent to the printer but not printed is discarded (cleared).

You can also enter hex dump mode, by turning off the printer, and then turning the printer back on while simultaneously pressing the ONLINE button and the LF/FF button until the printer beeps.

Checking Vertical Print Alignment (V-ALMNT)

The V-ALMNT function corrects the vertical character displacement that sometimes occurs with bidirectional printing. Characters printed from left to right are not aligned with characters printed from right to left as shown below:

```
This example shows how printing looks
when characters are vertically
misaligned.  Note that the left
margin is not straight.
```

If you notice misaligned printing, use the following procedure to check and correct the vertical print alignment.

Procedure

Make sure that continuous forms paper is loaded in the printer. If possible, use forms at least 216 mm (8.5 inches) wide for 80-column printers or 356 mm (14 inches) wide for 136-column printers to avoid printing on the platen. However, you can also use letter or A4 size forms if you set the WIDTH option in MENU1 to 8 inches. See the section **Changing MENU1 and MENU2 Options** for details. Then proceed as follows to check and correct vertical print alignment:

1. **Enter setup mode.**

   Press the FONT button and the MENU button simultaneously until the printer beeps. Wait for the printer to stop printing and check that the following <<FUNCTION>> menu is printed:

```
<<FUNCTION>>
  SAVE&END  MENU1  MENU2  HARDWRE  ADJUST  CONFIG  DEFAULT  LIST   SELF-TST  HEX-DUMP
  V-ALMNT
```

2. **Select the V-ALMNT function.**

   Repeatedly press the LOCK button to position the red cursor under V-ALMNT, then press the FONT button or the MENU button to select the V-ALMNT function. The printer prints the help menu then starts printing rows of parallel bars using letter quality speed.

3. **Adjust the vertical print alignment at letter quality speed.**

   Examine the parallel bars. If the bars are aligned (not jagged), go to step 4. If the bars are offset to the left, repeatedly press the FONT button until the bars are aligned. If the bars are offset to the right, repeatedly press the MENU button until the bars are aligned. (In the following figure, the first line is assumed to be printed from left to right.)

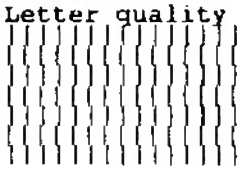

Bars offset to the left

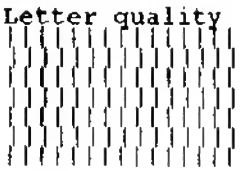

Bars offset to the right

4. **Adjust the vertical print alignment at correspondence speed.**

   Press the LOCK button to switch from letter speed to correspondence speed.

   Examine the parallel bars and adjust the vertical print alignment as described step 3.

5. **Adjust the vertical print alignment at draft speed.**

   Press the LOCK button to switch from correspondence speed to draft speed.

   Examine the parallel bars and adjust the vertical print alignment as described step 3.

6. **Exit the V-ALMNT function.**

   Press the ONLINE button to exit the V-ALMNT function and save the new vertical alignment settings. The printer exits setup mode and returns online.

   NOTE
   To exit the V-ALMNT function, you must exit setup mode.

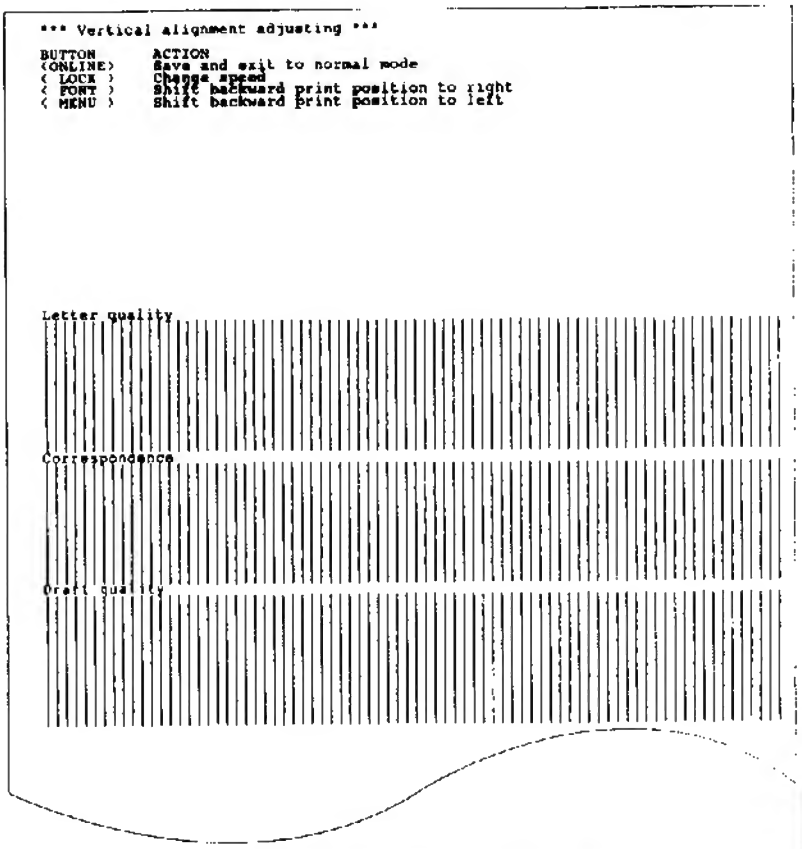

Correct vertical print alignment

SETUP MODE REFERENCE

The following flowchart shows how setup mode is organized for the Fujitsu DPL24C PLUS emulation. Differences in the IBM Proprinter XL24E and Epson ESC/P2 emulations are summarized after the flowchart.

Setup Mode

DPL24C PLUS ORGANIZATION

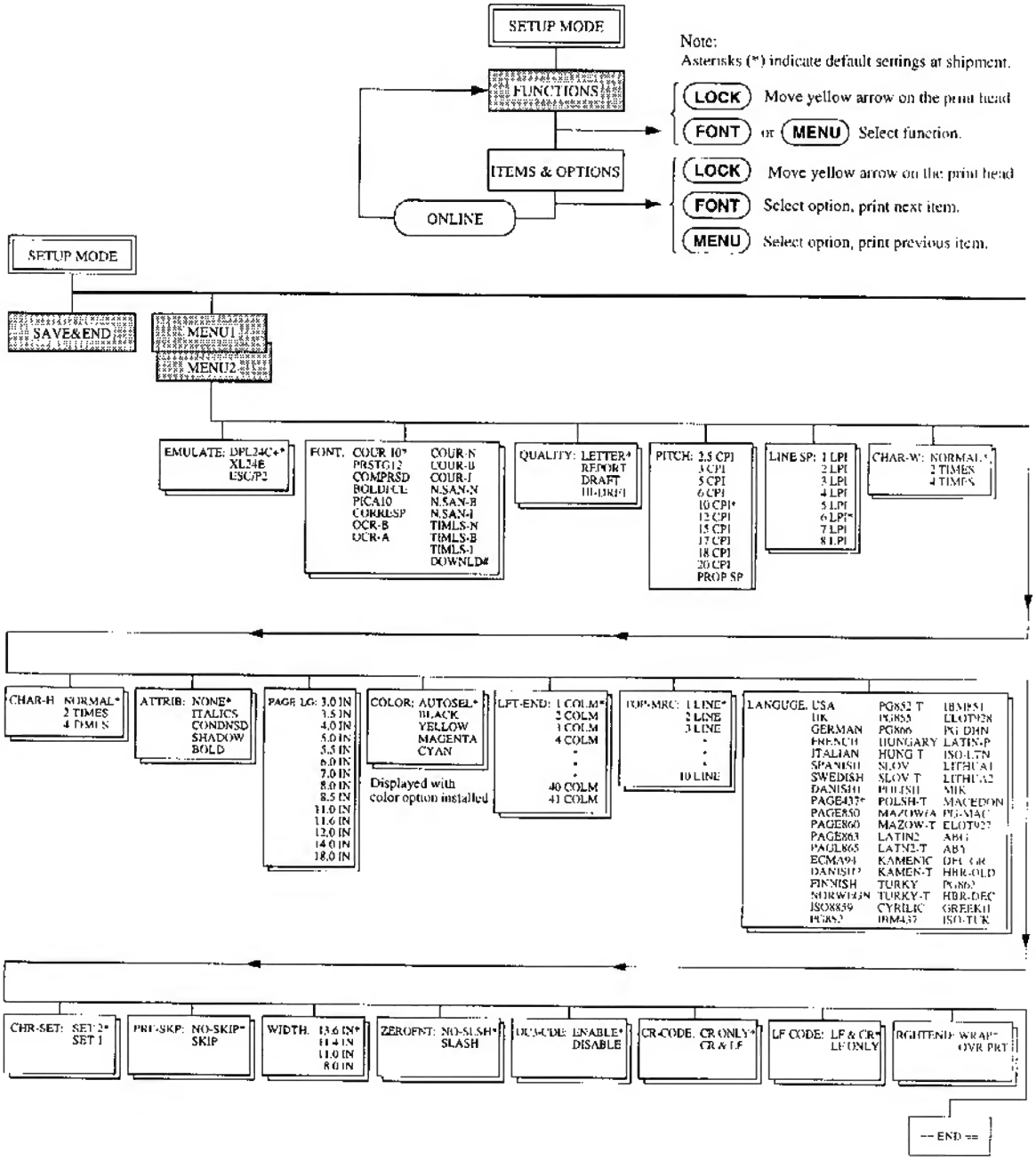

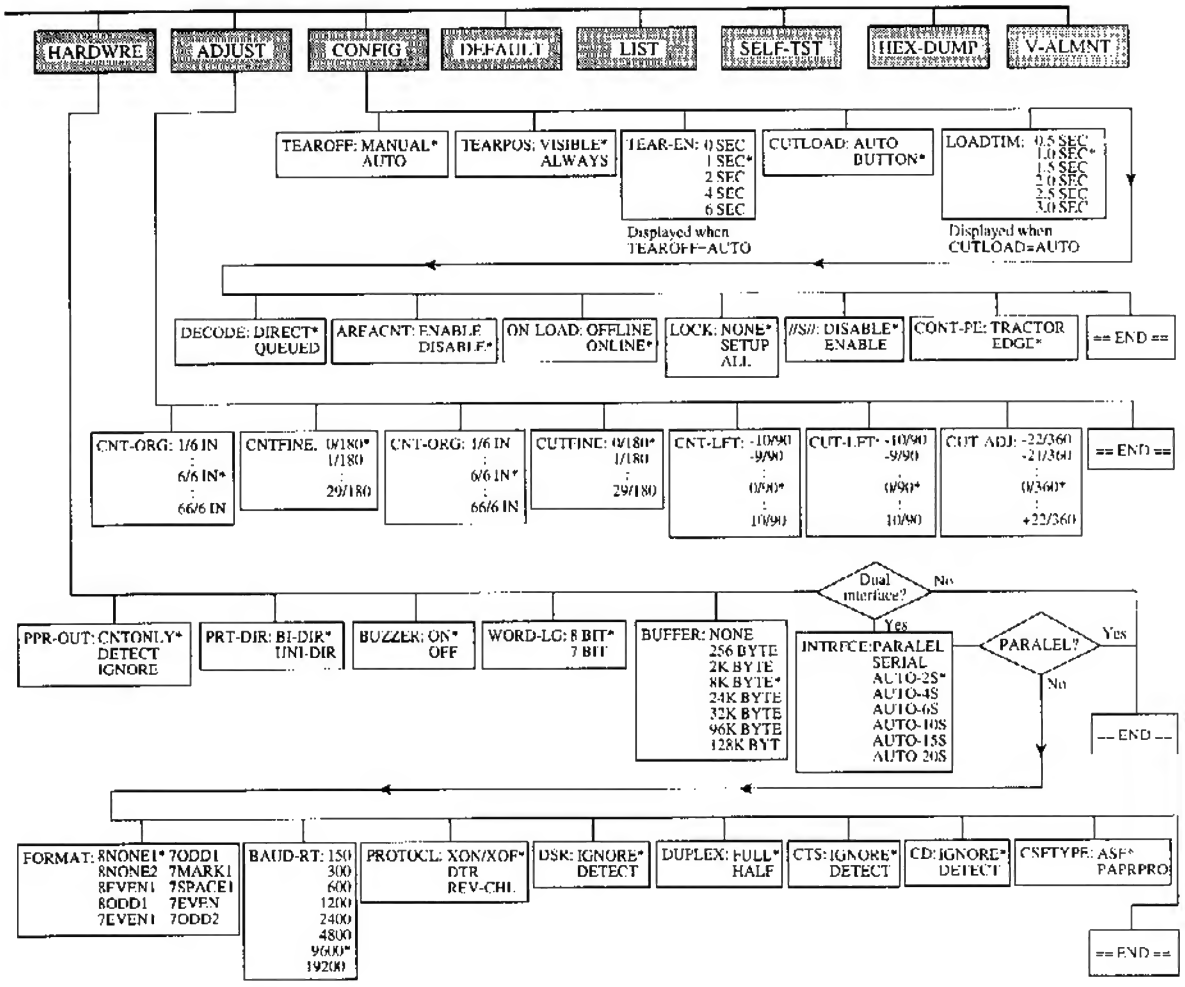
HARDWRE
ADJUST
CONFIG
DEFAULT
LIST
SELF-TST
HEX-DUMP
V-ALMNT
TEAROFF: MANUAL* AUTO
TEARPOS: VISIBLE* ALWAYS
TEAR-EN: 0 SEC 1 SEC* 2 SEC 4 SEC 6 SEC
Displayed when TEAROFF=AUTO
CUTLOAD: AUTO BUTTON*
LOADTIM: 0.5 SEC 1.0 SEC* 1.5 SEC 2.0 SEC 2.5 SEC 3.0 SEC
Displayed when CUTLOAD=AUTO
DECODE: DIRECT* QUEUED
AREACNT: ENABLE DISABLE*
ON LOAD: OFFLINE ONLINE*
LOCK: NONE* SETUP ALL
//S//: DISABLE* ENABLE
CONT-PE: TRACTOR EDGE*
== END ==
CNT-ORG: 1/6 IN : 6/6 IN* : 66/6 IN
CNTFINE: 0/180* 1/180 : 29/180
CNT-ORG: 1/6 IN : 6/6 IN* : 66/6 IN
CUTFINE: 0/180* 1/180 : 29/180
CNT-LFT: -10/90 -9/90 : 0/90* : 10/90
CUT-LFT: -10/90 -9/90 : 0/90* : 10/90
CUT ADJ: -22/360 -21/360 : 0/360* : +22/360
== END ==
Dual interface?
No
Yes
PPR-OUT: CNTONLY* DETECT IGNORE
PRT-DIR: BI-DIR* UNI-DIR
BUZZER: ON* OFF
WORD-LG: 8 BIT* 7 BIT
BUFFER: NONE 256 BYTE 2K BYTE 8K BYTE* 24K BYTE 32K BYTE 96K BYTE 128K BYT
INTRFCE: PARALEL SERIAL AUTO-2S* AUTO-4S AUTO-6S AUTO-10S AUTO-15S AUTO 20S
PARALEL?
Yes
No
-- END --
FORMAT: 8NONE1* 8NONE2 8EVEN1 8ODD1 7EVEN1 7ODD1 7MARK1 7SPACE1 7EVEN 7ODD2
BAUD-RT: 150 300 600 1200 2400 4800 9600* 19200
PROTOCL: XON/XOF* DTR REV-CHL
DSR: IGNORE* DETECT
DUPLEX: FULL* HALF
CTS: IGNORE* DETECT
CD: IGNORE* DETECT
CSFTYPE: ASF* PAPRPRO
== END ==

Setup Mode

Differences in IBM Proprinter XL24E Emulation

In the IBM Proprinter XL24E emulation, MENU1 and MENU2 differ from the DPL24C PLUS emulation in the following ways:

- The following options are different:

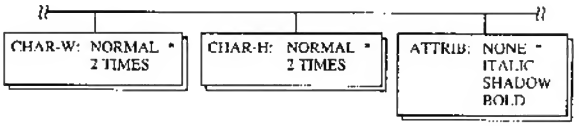

- The AGM item is provided:

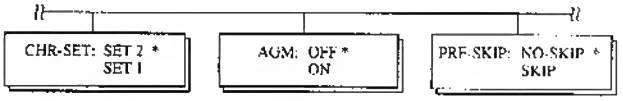

- The LF-CODE item's default is set to the other option:

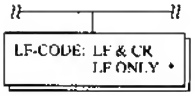

Differences in Epson ESC/P2 Emulation

In the Epson ESC/P2 emulation, MENU1 and MENU2 differ from the DPL24C PLUS emulation in the following ways:

- The ZEROFNT and LF-CODE items are not defined.
- The following options are different:

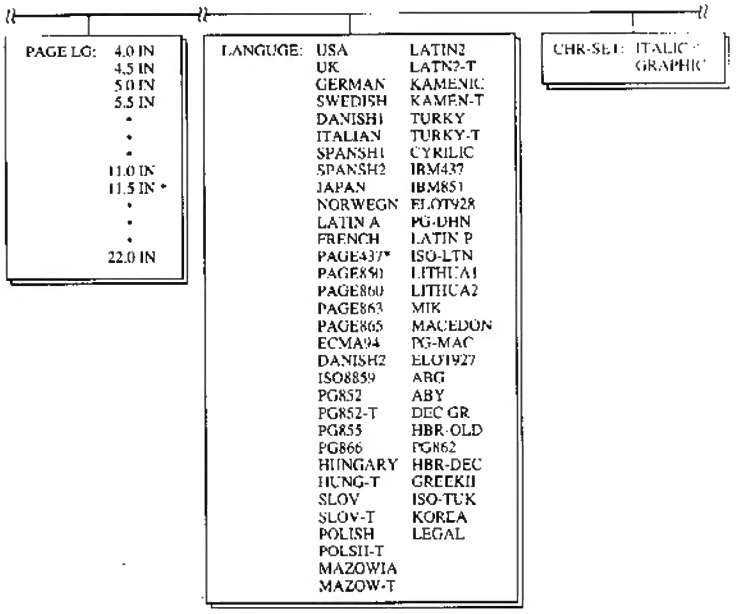

Setup Mode

ONLINE SETUP MODE

The preceding sections describe offline setup mode. This section introduces online setup mode. The tedious task of setting up printer features one-by-one from the control panel and printing and checking the desired options on paper can be avoided by using online setup mode. In online setup mode, printer features are set via the computer rather than the printer control panel.

Put the printer in online setup mode, in either of the following two ways:

- Turn the printer off and then turn the printer back on while pressing the MENU button. Hold down the button until the printer beeps.

- Issue the printer command ESC e ONLINE. This command is valid in any emulation.

Send setup data from the computer in any of the following three ways:

- Enter setup data directly from the computer keyboard before starting your job. With MS-DOS, hold down the Ctrl key and type P. Data entered from the keyboard is sent directly to the printer. When data entry is complete, hold down the Ctrl key again and type P. This method is useful when just a few settings need to be changed.

- Use an editor program to prepare a setup data file and then send the file to the printer using a command before starting your job. With MS-DOS, use the COPY command. This method is useful when settings are used repeatedly.

- Write a program that enables interactive entry of setup data on the CRT screen. This method is the most useful of the three. Check with your dealer for currently available programs.

To exit from online setup mode, send EXIT as the last setup data.

For details of setup data and its format, refer to the programmer's manual for each emulation.

MAINTENANCE

Your printer requires very little care. Occasional cleaning and replacement of the ribbon cartridge are all that is required.

Lubrication of the printer is not usually necessary.
If the print head carriage does not move smoothly back and forth, clean the printer as described in this chapter. If the problem continues, contact your dealer to determine whether lubrication might be needed.

CLEANING

The front and back covers, the separator, and the acoustic cover of the printer help protect against dust, dirt, and other contaminants. However, paper produces small particles that accumulate inside the printer. This section explains how to clean and vacuum the printer and how to clean the platen and paper bail rollers.

It is easier to clean the printer when the front cover, the separator, and the cut sheet stand and back cover are removed.

Cleaning and Vacuuming the Printer

WARNING
To avoid any possibility of injury, before cleaning the printer, turn off the power to both the printer and the computer, and unplug the printer.

Use the following procedure to clean and vacuum the printer as required:

1. Remove any paper from the printer. Make sure that the power is off, and then disconnect the printer power cord.

2. Using a soft vacuum brush, vacuum the exterior of the printer. Be sure to vacuum the air vents at the front, left sides, and bottom of the printer. Also vacuum the cut sheet stand or feeder.

3. Use a soft, damp cloth to wipe the exterior of the printer, including the covers and separator. A mild detergent may be used.

   CAUTION
   Do not use solvents, kerosene, or abrasive cleaning materials that may damage the printer.

4. Open the front cover of the printer and remove the ribbon cartridge. Using a soft vacuum brush, gently vacuum the platen, print head carriage, and surrounding areas. You can easily slide the print head to the left or right when the power is off. Be careful not to press too hard on the flat ribbon cable that extends from the print head carriage.

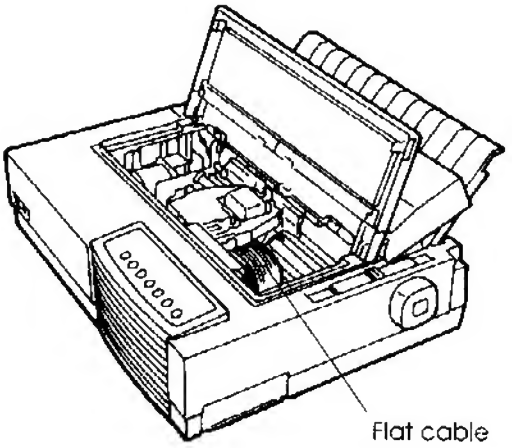

Printer interior

5. Re-install the ribbon cartridge. Close the front cover.

6. Open the separator. Vacuum the bail rollers, paper entry slot, and surrounding areas.

7. Raise the cut sheet stand and the back cover. Vacuum the forms tractors and surrounding areas.

Cleaning the Platen and Paper Bail Rollers

Clean the platen and paper bail rollers about once a month to remove excess ink. Use the platen cleaner recommended by your supplier and proceed as follows:

1. Apply a small amount of platen cleaner to a soft cloth. Avoid spilling platen cleaner inside the printer.

   CAUTION
   Do not use alcohol to clean the platen. Alcohol may cause the rubber to harden.

2. Place the cloth against the platen and manually rotate the platen knob.

3. To dry the platen, place a dry cloth against the platen and manually rotate the platen knob.

4. Gently wipe the paper bail rollers using the cloth moistened with the platen cleaner. Dry the rollers using a dry cloth.

REPLACING THE RIBBON

There are two ways of replacing the ribbon. You can install a new ribbon cartridge in the printer or refill the old ribbon cartridge with new ribbon from a ribbon subcassette. Appendix A lists order numbers for ribbon cartridges and ribbon subcassettes. The following procedure is for ribbon cartridges. For ribbon subcassettes, refer to the instructions shipped with the subcassette.

To replace the ribbon cartridge:

1. Turn off the printer.

2. Open the front cover of the printer. For easy installation, slide the print head carriage to a position where it does not face a bail roller.

   CAUTION
   The print head may be hot if you have been printing recently.

3. Move the paper thickness lever to position **D**.

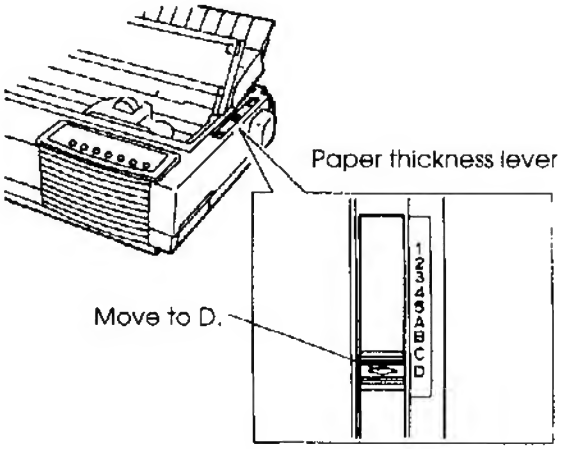

Paper thickness lever

4. To remove the ribbon cartridge, press the ribbon release levers located on either side of the cartridge and carefully lift the cartridge out of the printer.

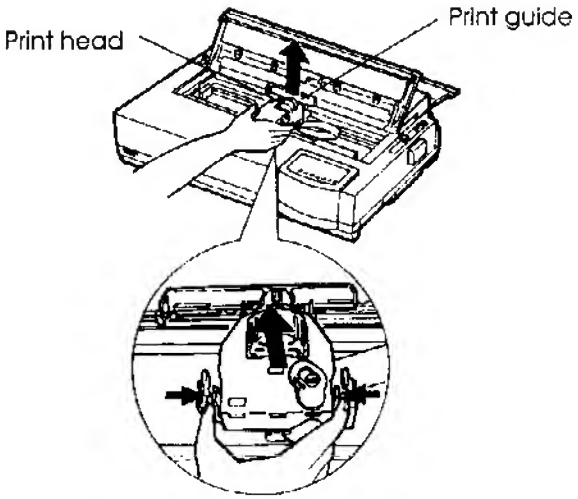

Removing the ribbon cartridge

5. Remove the new ribbon cartridge from its package. For a black ribbon cartridge, push in the sides of the two ribbon release tabs. The tabs will snap into the cartridge and the ribbon feed mechanism will engage.

   For a color ribbon cartridge (option), pull the ribbon release plate in the direction of the arrow and press the ribbon feed knob toward "FREE." The ribbon feed mechanism engages.

   Turn the ribbon feed knob clockwise to be sure that it feeds properly.

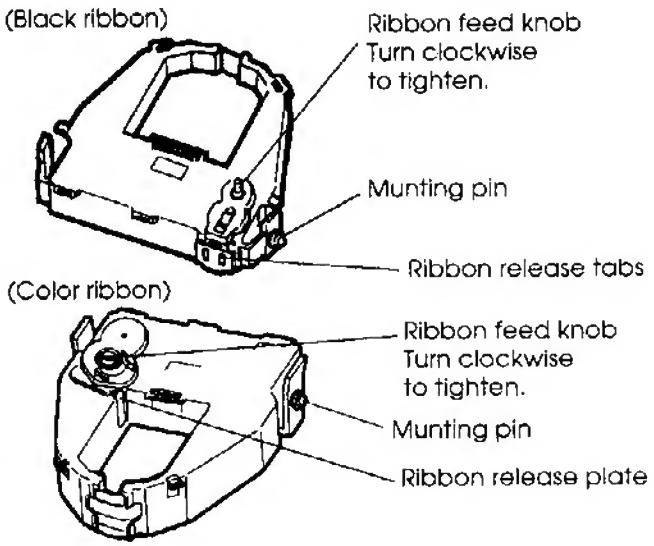

Preparing the new ribbon cartridge

6. Place the two mounting pins on the ribbon support brackets of the head carrier. The two mounting pins are located on the sides of the ribbon release levers.) Insert the ribbon so that the ribbon falls between the nose of the print head and the plastic print guide.

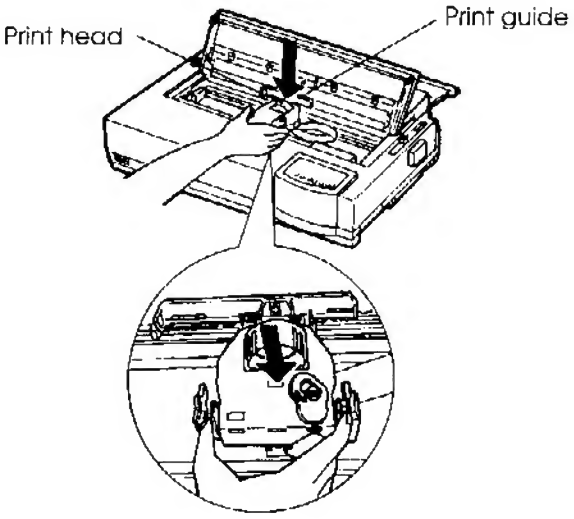

Installing the new ribbon cartridge

7. Press the ribbon release levers until the mounting pins snap into the holes on the ribbon support brackets. Gently pull on the cartridge to verify that the pins are securely positioned in the holes.

8. Turn the ribbon feed knob clockwise to tighten the ribbon.

9. Move the paper thickness lever back to its original position. For single sheet printing, the correct position is **1**. Table 3.2 in Chapter 3 gives other paper thickness lever settings.

10. Close the front cover of the printer.

REPLACING THE PRINT HEAD

The print head is easy to replace.

CAUTION
The print head may be hot if you have been printing recently.

To remove the print head:

1. Turn off the printer.
2. Open the front cover of the printer and remove the ribbon cartridge.
3. Pull the right end of the head lock wire forward to release it from the hook at the right of the print head carriage. Then release the wire from the center hook.
4. Remove the print head from the connector on the carriage, as shown in the figure below.

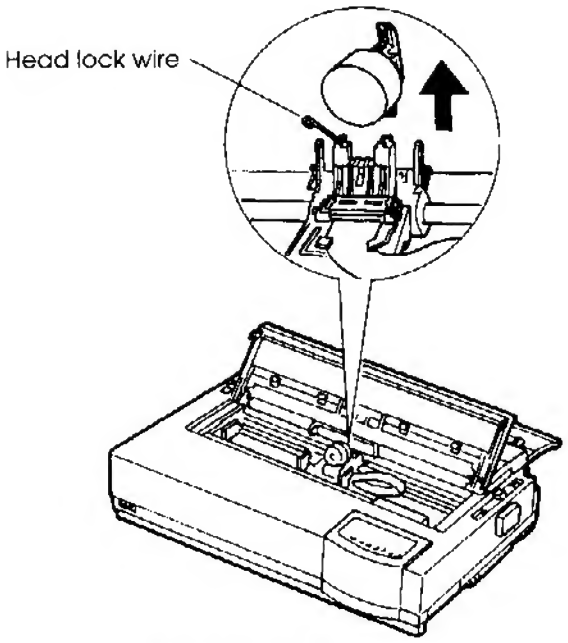

Replacing the print head

To install the print head:

1. Carefully fit the mounting guide grooves of the print head on the locating studs on the carriage.

2. Push the print head into the connector and hook the wire into place in the reverse order of removal.

7

TROUBLE-SHOOTING

Your printer is extremely reliable, but occasional problems may occur. You can solve many of these problems yourself, using this chapter.
If you encounter problems that you cannot resolve, contact your dealer for assistance.

This chapter is organized as follows:

- Solving problems
- Diagnostic functions
- Getting help

SOLVING PROBLEMS

The tables in this section describe common printer problems and their solutions. The following types of problems are considered:

- Print quality problems
- Paper handling problems
- Operating problems
- Printer failures

Print Quality Problems

Poor print quality or other printing problems are often caused by incorrect printer setup or incorrect software settings. A gradual decrease in print quality usually indicates a worn ribbon. Table 7.1 identifies common print quality problems and suggests solutions.

Table 7.1 Print Quality Problems and Solutions

Problem	Solution
Printing is too light or too dark.	Make sure that the ribbon cartridge is properly installed and that the ribbon feeds smoothly. Make sure that the paper thickness lever is set for the thickness of your paper. See Table 3.2 in Chapter 3. Check ribbon wear. Replace the ribbon if necessary.
Stains or smudges appear on the page.	Make sure that the paper thickness lever is set for the thickness of your paper. See Table 3.2 in Chapter 3. Check ribbon wear. Replace the ribbon if necessary. Check whether the tip of the print head is dirty. Clean the head with a soft cloth if necessary.
The page is blank.	Make sure that the ribbon cartridge is properly installed.
Printing is erratic or the wrong characters are printed. Many "?" characters are printed.	Make sure that the interface cable is securely connected to both the printer and computer. Make sure that the printer emulation selected in your software is the same as the emulation selected on the printer. See the section **Selecting an Emulation** in Chapter 2. If you are using an RS-232C serial interface, make sure that the serial settings required by your software or computer are the same as the settings on the printer. See the section **Changing Hardware Options** in Chapter 5.

Table 7.1 Print Quality Problems and Solutions (Cont.)

Problem	Solution
Printing is vertically misaligned (jagged).	Use the printer's V-ALMNT function to check the vertical print alignment. If necessary, adjust the print alignment. See the section **Using the Diagnostic Functions** in Chapter 5.
The top margin is wrong.	The top margin is the sum of the top-of-form setting, the software-specified top margin, and the printer's TOP-MRG setting. Proceed as follows: • Make sure that the top-of-form setting is correct. The factory default is 25.4 mm (1 inch). See the section **Changing Top-of Form** in Chapter 5. • Check the software-specified top margin. Refer to your software documentation. • Check the printer's TOP-MRG setting. See the section **Changing MENU1 and MENU2 Options** in Chapter 5.
Lines are double spaced instead of single spaced.	Check the line spacing setting in your software. Change the CR-CODE setting in the printer setup mode to CR ONLY. See the section **Changing MENU1 and MENU2 Options** in Chapter 5.
The printer overprints on the same line.	Change the CR-CODE setting in the printer setup mode to CR & LF. See the section **Changing MENU1 and MENU2 Options** in Chapter 5.
The next print line starts where the previous line ended instead of at the left margin.	Change the LF-CODE setting in the printer setup mode to LF & CR. See the section **Changing MENU1 and MENU2 Options** in Chapter 5.

Paper Handling Problems

Table 7.2 describes common paper handling problems and suggests solutions. See Chapter 3 for detailed procedures on loading and using paper.

Table 7.2 Paper Handling Problems and Solutions

Problem	Solution
Paper cannot be loaded or fed.	Make sure that the paper select lever is set correctly. Move the lever backward for continuous forms and forward for single sheets. Make sure that the paper covers the paper-out sensor, i.e., the left paper edge is within 52 mm for single sheets or 41 mm for continuous forms from the left edge of the platen. (This problem cannot occur if you use the forms tractor unit or insert a single sheet with its left edge in contact with the left paper guide.) Make sure that the tractor unit is correctly installed and that the tractor shaft gear engages the platen shaft gear. If you are using the tractor unit for rear feeding, open the front cover and make sure that the second stud from the left on the printer bottom frame projects. If you are using a cut sheet feeder, make sure that the bin lever is set to the "CLOSED" position. (The bin lever is on the left side of the feeder.) If you are using a cut sheet feeder, open the front cover and make sure that the third stud from the left on the printer bottom frame projects.

Table 7.2 Paper Handling Problems and Solutions (Cont.)

Problem	Solution
Paper cannot be loaded or fed. (continued).	If you are using a double-bin adapter, open the front cover and make sure that the fourth stud from the left on the printer bottom frame projects.
Paper jams while loading.	Turn off the printer and remove the jammed paper. Remove any obstructions from the paper path. Make sure that the paper thickness lever is set for the thickness of your paper. See Table 3.2 in Chapter 3. If you are using a cut sheet feeder, make sure that the bin lever is set to the "CLOSED" position. (The bin lever is on the left side of the feeder.) Make sure that the paper is not folded, creased, or torn. Reload the paper.
Paper jams while printing.	Turn off the printer and remove the jammed paper. Remove any obstructions from the paper path. Make sure that the paper thickness lever is set for the thickness of your paper. See Table 3.2 in Chapter 3. For continuous forms, make sure that the incoming and outgoing paper stacks are correctly placed. Paper should feed straight.

Table 7.2 Paper Handling Problems and Solutions (Cont.)

Problem	Solution
Paper jams while printing. (continued).	If you are using a cut sheet feeder, make sure that the bin lever is set to the "CLOSED" position. (The bin lever is on the left side of the feeder.) Reload the paper.
Paper slips off the forms tractors or the perforated holes of the paper tear during printing.	Make sure that the forms tractors are positioned correctly for the width of your paper and that the perforated holes of the paper fit directly over the tractor sprockets.

Tips for clearing a jammed sheet from the printer

If a sheet of paper is jammed between the print head and the platen and cannot be removed, clear it as follows:

1. Turn off the printer and disconnect the power cord from the receptacle.

2. Push up the locking levers to release the forms tractors and open the paper holders.

3. Move the paper thickness lever to position D.

4. Move the print head so that you can remove the jammed sheet easily and clear the sheet.

NOTE
The print head is hot immediately after printing. Move it after making sure that it gets cool.

- **If you cannot clear the jammed sheet by the above procedure, set fourfold continuous forms paper on the forms tractors and turn the platen knob to feed the paper forward. The jammed paper is pushed out. Before operation, be sure to position the print head at the center of the jammed paper.**

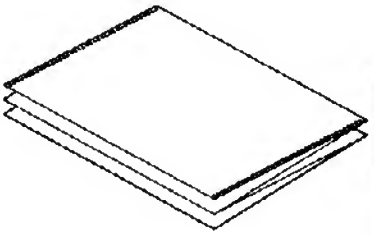

Common cause of abnormal paper feeding

A dirty paper sensor often causes paper misfeeding. Clean the paper sensor as follows:

1. Turn off the printer and disconnect the power cord from the receptacle.

2. Remove the front cover and the top cover so that you can access the paper sensors. (See the figure.)

3. Use a cotton swab and gently wipe the paper sensors.

4. Mount the front cover and the top cover and turn on the printer.

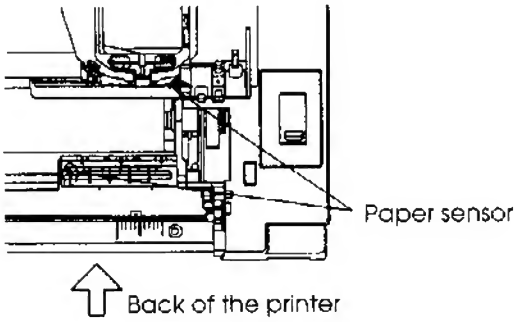

Operating Problems

Table 7.3 identifies common operating problems and suggests solutions. If you cannot resolve a problem, contact your dealer.

Table 7.3 Operating Problems and Solutions

Problem	Solution
The power does not turn on.	Make sure that the "1" on the printer power switch is toggled up. Make sure that the power cord is securely connected to both the printer and the outlet. Make sure that the power outlet is functional. Turn the power off. Wait 30 seconds and then turn the printer on again. If the printer still has no power, contact your dealer.
The printer is on but it will not print.	Make sure that the printer is online. Make sure that the interface cable is securely connected to both the printer and the computer. If the red PAPER OUT indicator is lit, load paper. Run the printer self-test (see Chapter 5). If the self-test executes normally, the problem is caused by the interface, the computer, incorrect printer settings, or incorrect software settings. Make sure that the printer emulation selected in your software is the same as the emulation selected on the printer. See the section **Selecting an Emulation** in Chapter 2.

Table 7.3 Operating Problems and Solutions (Cont.)

Problem	Solution
The printer is on but it will not print (continued).	If you are using an RS-232C serial interface, make sure that the serial settings required by your software or computer are the same as the settings on the printer. See the section **Changing Hardware Options** in Chapter 5.
The cut sheet feeder does not operate.	Make sure that the cut sheet feeder is firmly mounted on the printer. Open the front cover and make sure that the third stud from the left on the printer bottom frame projects.
The double-bin adapter does not operate.	Make sure that the double-bin adapter is firmly mounted behind the cut sheet feeder. Open the front cover and make sure that the fourth stud from the left on the printer bottom frame projects.

Printer Failures

A user cannot generally resolve a problem involving defective printer hardware. On detecting a fatal error, the printer will:

- Stop printing
- Beep four times
- Turn the ONLINE indicator off
- Blink the PAPER OUT indicator (with a FONT indicator lit indicating the error type).

Table 7.4 Printer Failures

Error	FONT indicators lit
+34 V undervoltage error	COUR10
Left end sensor error	PRESTG12
Overload printing error	COMP17
RAM error	Bold PS

The following errors cause the printer to turn off the power:

- Print head error
- Space motor error
- Line feed motor error
- +34 V overvoltage error

No error condition is displayed if any of these errors occurs.

Turn the printer off and back on, then rerun the same job to check if the error was transient. If the error recurs, contact your dealer.

DIAGNOSTIC FUNCTIONS

The printer diagnostic functions are SELF-TST, HEX-DUMP, and V-ALMNT.

- SELF-TST tells you whether the printer hardware is functioning correctly. If the printer hardware is functional, any problems you are having are probably caused by incorrect printer settings, incorrect software settings, the interface, or the computer.

- HEX-DUMP allows you to determine whether the computer is sending the correct commands to the printer, and whether the printer is executing the commands correctly. This function is useful to programmers or others who understand how to interpret hex dumps.

- V-ALMNT allows you to check and, if necessary, correct the printer's vertical print alignment.

For details on using these functions, all of which are available in the printer setup mode, see the section **Using the Diagnostic Functions** in Chapter 5.

GETTING HELP

If you are not able to correct a problem using this chapter, contact your dealer for assistance. Be prepared to provide the following information:

- Your printer model number, serial number, and date of manufacture. Look for this information on the rating label on the left side of the printer.
- Description of the problem
- Type of interface you are using
- Names of your software packages
- List of the printer default settings. To print the default settings, see the section **Printing a List of Selected Options** in Chapter 5.

8

INSTALLING OPTIONS

The installation of options allows, you to expand the capabilities of your printer. Options available for the printer include:

- Single bin cut sheet feeder
- Double-bin adapter for cut sheet feeder (for 136-column printer only)
- Color kit

Options can be purchased from your dealer and installed by you. Order numbers for options are given in Appendix A. Note that the RS-232C serial interface is a factory-installed option.

This chapter describes what to do after installing each option.

Options

INSTALLING THE CUT SHEET FEEDER

A cut sheet feeder allows you to automatically feed single sheet. The ASF100 single-bin feeder is available as an option for the 80-column printer, and the ASF300 single-bin feeder for the 136-column printer.
For the 136-column printer, a double-bin adapter can be added to the single-bin feeder.

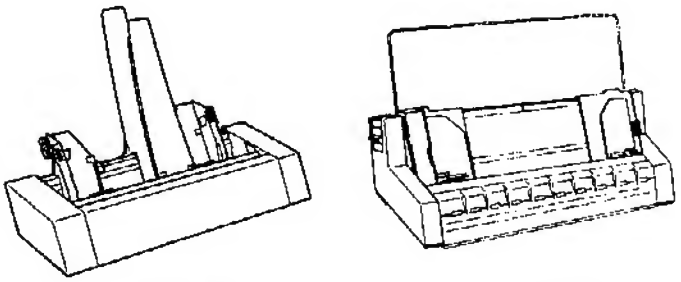

ASF100 ASF300

Single bin cut sheet feeder

If you are using the forms tractor unit for bottom feeding, remove the tractor unit and install it at the rear of the printer. To mount the cut sheet feeder on your printer, remove the acoustic cover and the two brackets from the separator (store them for future use). For details on installing the feeder, refer to the manual shipped with the feeder.

For details on using your cut sheet feeder, see the section **Loading Paper in the Cut Sheet Feeder (Option)** in Chapter 3.

INSTALLING THE COLOR KIT

You can turn your monochrome printer into a color printer by installing a color kit on the print head carriage. The ribbon shift unit of the color kit is shown below.

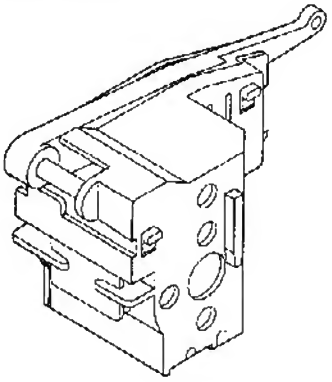

Color kit (ribbon shift unit)

To install the color kit on your printer, cut off the cover from the print head carriage. For details, refer to the instructions shipped with the kit.

After the color kit is installed, enter setup mode and make sure that AUTOSEL is specified for the desired color selection mode. If AUTOSEL is not specified, the printer will not follow the color command from your software. The following five options are provided. AUTOSEL is selected unless you change the color selection mode.

AUTOSEL:	Seven colors are printed by command.
BLACK:	Black is printed regardless of commands.
YELLOW:	Yellow is printed regardless of commands.
MAGENTA:	Red is printed regardless of commands.
CYAN:	Blue is printed regardless of commands.

For information on entering setup mode and specifying the color selection, see the section **Changing MENU1 and MENU2 Options** in Chapter 5.

Use the self-test function to check color printing independent of the color command from your software. See the section **Testing the Printer (Offline)** in Chapter 2.

A

SUPPLIES AND OPTIONS

This appendix lists the supplies, options, and programmer's manuals available for the printer. Contact your dealer for information on ordering any of these items.

SUPPLIES

Supplies	Order Number
Ribbon cartridges	
Black ribbon	CA02374-C104
Color ribbon	CA02374-C303
Ribbon subcassette	
Black ribbon	CA02374-C204
Color ribbon	CA02374-C403
Print head	CA02281-E618

OPTIONS

Option	Order Number	Description
Cut sheet feeder		
For 80-column printers	ASF100-FJ3701	Single-bin feeder (double-bin adapter is not available)
For 136-column printers	ASF300-FJ3801 ASF300-FJ3811	Single-bin feeder Double-bin adapter; mounted on single-bin feeder
Color kit	CA02374-C511	Color ribbon included

Fujitsu Creative Faces™	D05B-9011-C100	Font-scaling software utility for Microsoft® Windows™; produces smooth, well-formed characters that are virtually free of jagged edges.

B

PRINTER AND PAPER SPECIFICATIONS

This appendix gives the physical, functional, and performance specifications for the printer.
It also gives detailed paper specifications.

PHYSICAL SPECIFICATIONS

Dimensions		80 columns	136 columns
	Height:	133 mm (5.2 in)	130 mm (5.1 in)
	Width:	434 mm (17 in)	570 mm (22.4 in)
	Depth:	330 mm (13 in)	330 mm (13 in)
Weight:		7.5 kg (16.5 lb)	8.5 kg (18.7 lb)

AC power requirements

Model:	M33051A/M33061A/M3388A/M3389A 100 to 120 VAC ±10%; 50/60 Hz
Model:	M33051B/M33061B/M3388B/M3389B 220 to 240 VAC −10%, +6%; 50/60 Hz

Power consumption	Average 120 VA Maximum 240 VA
Heat generation	Average 65 kcal/h
Interface	Centronics parallel or Centronics parallel and RS-232C serial
Data buffer size	0, 256, 2K, 8K, 24K, 32K, 96K or 128K bytes
Download buffer	Maximum 128K bytes (128K minus data buffer size)
Operating environment	5 to 38°C (41 to 100°F) 30% to 80% RH (no condensation) Wetbulb temperature, less than 29°C (84°F)
Storage environment	−15 to 60°C (4 to 140°F) 10% to 95% RH (no condensation)
Acoustic noise	Average 53 dBA when printing in letter quality ISO 7779 (Bystander Position Front)

FUNCTIONAL SPECIFICATIONS

Print method
Impact dot matrix with a 0.2 mm, 24-wire head

Print direction
Bidirectional logic-seeking or unidirectional seeking

Character cell

	Horizontal × vertical
Letter (10 cpi):	36 × 24 dots
Letter (12 cpi):	30 × 24 dots
Report:	18 × 24 dots
Draft:	12 × 24 dots
High-speed draft:	9 × 24 dots

Paper handling

Standard:
Friction-feed platen (cut sheets)
Push tractors (rear feed of continuous forms)
Pull tractors (bottom feed of continuous forms)
Paper loading by LOAD button
Advancing perforations to tear-off edge by TEAR OFF button
Parking continuous forms when using cut sheets

Optional:
Single-bin cut sheet feeder
Double-bin adapter (for 136 column printer only)

Paper type
1-to 5-part side-glued or paper-stapled fanfolded continuous forms or label sheets with sprocket holes
1-to 5-part top-glued cut sheets and envelopes

Paper size

		80 columns	136 columns
Continuous	Width:	102–267 mm (4–10.5 in)	102–420 mm (4–16.5 in)
	Length:	102 mm (4 in) or greater	Same as left
Cut sheets	Width:	102–267 mm (4–10.5 in)	102–420 mm (4–16.5 in)
	Length:	76–364 mm (3–14.3 in)	76–420 mm (3–16.5 in)

Paper thickness	Up to 0.35 mm (0.014 inch)
Paper length	
By software	Programmable in one line or inch increments in all emulations
By control panel	Depends upon emulations. Default is 11 inches for all emulations.
DPL24C+/XL24E:	3, 3.5, 4, 5, 5.5, 6, 7, 8, 8.5, 11, 11.6, 12, 14, or 18 inches
ESC/P2:	4, 4.5, 5, 5.5, ..., 11, 11.5, ..., 22 inches
Number of copies	Up to 5, including the original
Command sets (emulations)	
Resident	Fujitsu DPL24C PLUS IBM Proprinter XL24E Epson ESC/P2
Character sets	
DPL24C+/XL24E:	• IBM PC character sets 1 and 2 • IBM PS/2 character sets (code pages 437, 850, 852, 855, 860, 863, 865, 866, and DHN) IBM 437 and 851 ISO 8859-1 and ECMA 94 Total of 56 national character sets • Fujitsu character sets (691 characters)
ESC/P2:	• Italic character set Graphics character sets 1 and 2 • IBM PS/2 character sets (code pages 437, 850, 852, 855, 860, 863, 865, 866, and DHN) IBM 437 and 851 ISO 8859-1 and ECMA 94 Total of 61 national character sets

Fonts		
Resident		Eighteen fonts available
	Bit map:	Courier 10, Pica 10, OCR-B 10, OCR-A 10, Prestige Elite 12, Boldface PS, Correspondence, Compressed, Draft, and High-speed Draft
	Outline:	Courier, Timeless, and Nimbus Sans ®; each in normal, bold, and italic styles
Downloaded		Available from independent vendors
Line spacing		1, 2, 3, 4, 5, 6, 7, or 8 lines per inch. Programmable in 1/360 inch or various increments for image graphics.
Character pitch		2.5, 3, 5, 6, 10, 12, 15, 17.1, 18, or 20 cpi, or proportional spacing. Programmable in 1/360 inch or various increments for image graphics.

Characters per line	80 columns	136 columns
10 cpi:	80 cpl	136 cpl
12 cpi:	96 cpl	163 cpl
15 cpi:	120 cpl	204 cpl
17.1 cpi:	136.8 cpl	231 cpl
18 cpi:	144 cpl	244 cpl
20 cpi:	160 cppl	272 cpl

cpi: characters per inch
cpl: characters per line

PERFORMANCE SPECIFICATIONS

Print speed	10 cpi	12 cpi
Letter:	113 cps	135 cps
Report:	225 cps	270 cps
Correspondence:	225 cps	270cps
Draft:	360 cps	432 cps
High-speed draft:	360 cps	432 cps

cpi: characters per inch
cps: characters per second

Line feed speed 60 ms per line at 6 lines per inch

Form feed speed 5.6 inches per second

Ribbon life

Color: Up to 0.3 million characters per color
Black: Up to 5.0 million characters

Certification

Safety:

Model	Regulation	Country
M33051A/M33061A	UL 1950-D3United States (for 100 to 120 VAC)	United States
	CSA C22.2/950 (for 100 to 120 VAC)	Canada
M33051B/M33061B	TÜV EN60950 (for 220 to 240 VAC)	Germany Europe

EMII regulation:

Model	Regulation	Country
M33051A/M33061A	FCC Part 15B class B (for 100 to 120 VAC)	United States
	C108.8-M1983 class B (for 100 to 120 VAC)	Canada
M33051B/M33061B	EN 55022 class B (for 220 to 240 VAC)	Europe
	AS/NZS 3548 class B (for 220 to 240 VAC)	Australia and New Zealand
M3388A/M3389A	CNS 13438 class B (for 100 to 120 VAC)	Asia
M3388B/M3389B	CNS 13438 class B (for 220 to 240 VAC)	Asia

PAPER SPECIFICATIONS

Print Area

This section illustrates the recommended print area for single sheets and continuous forms.

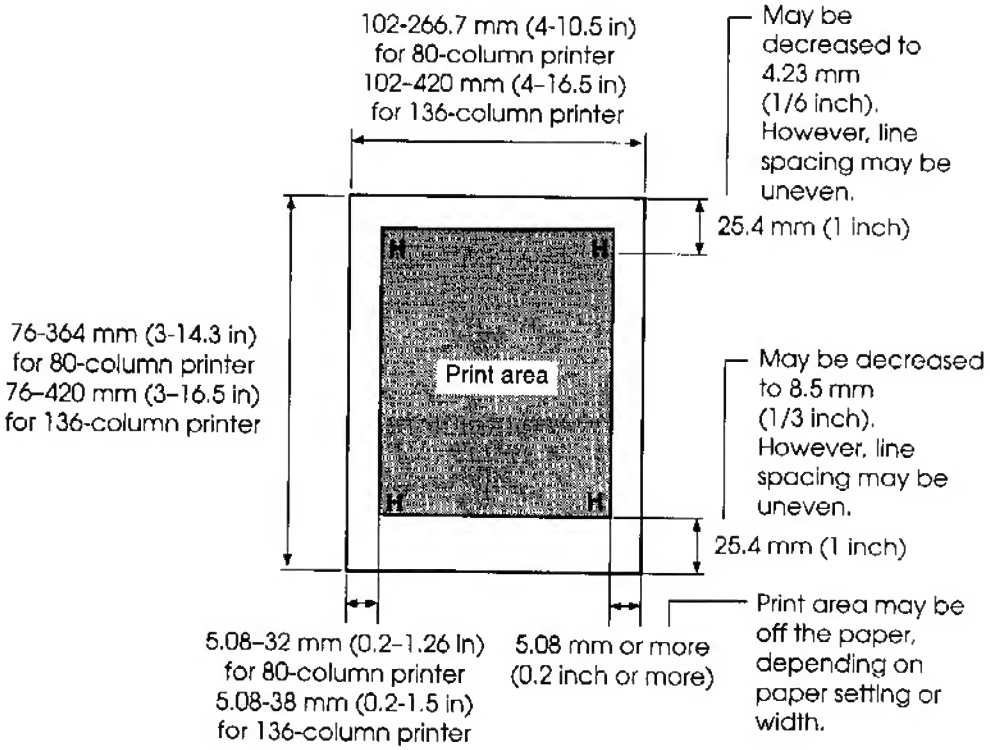

Print area for single sheets

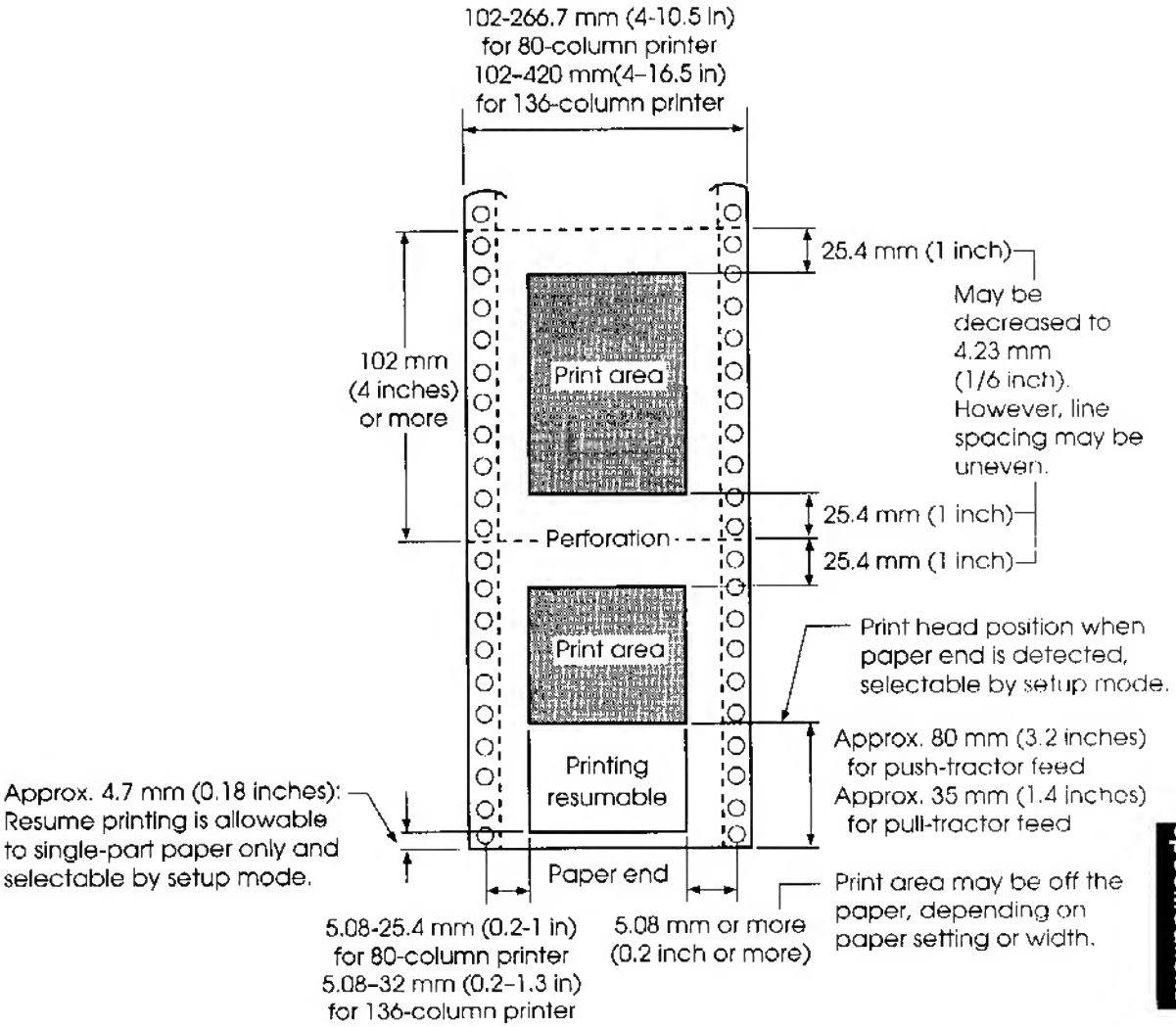

Print area for continuous forms

Paper Thickness

Paper thickness is given by the weight of the paper in either grams per square meter (g/m²) or in pounds per bond (lbs/bond). The following table shows the allowable paper thickness for one-part paper or for each sheet of multipart paper. The total thickness must not exceed 0.35 mm (0.014 inch).

The weight of carbonless or carbon-backed paper may vary, depending upon the paper manufacturer. When using paper of borderline thickness, test the paper before running a job.

Type of Paper	Number of Parts	Thickness
One-part	Single	47-81 g/m² (40-70 kg or 12-22 lb)
Carbonless		
2P	Top	40-64 g/m² (34-55 kg or 11-17 lb)
	Bottom	40-81 g/m² (34-70 kg or 11-22 lb)
3P	Top	40-64 g/m² (34-55 kg or 11-17 lb)
	Middle	40-64 g/m² (34-55 kg or 11-17 lb)
	Bottom	40-81 g/m² (34-70 kg or 11-22 lb)
4P	Top	40-64 g/m² (34-55 kg or 11-17 lb)
	Middle	40-64 g/m² (34-55 kg or 11-17 lb)
	Middle	40-64 g/m² (34-55 kg or 11-17 lb)
	Bottom	40-81 g/m² (34-70 kg or 11-22 lb)
5P	Top	40-52 g/m² (34-45 kg or 11-17 lb)
	Middle	40-52 g/m² (34-45 kg or 11-17 lb)
	Middle	40-52 g/m² (34-45 kg or 11-17 lb)
	Middle	40-52 g/m² (34-45 kg or 11-17 lb)
	Bottom	40-64 g/m² (34-55 kg or 11-17 lb)

kg: Weight in kilograms of 1000 sheets of 788 × 1091 mm paper (1.16 g/m²)

lb: Weight in pounds of 500 sheets of 17 × 22 inch paper (3.76 g/m²)

Type of Paper	Number of Parts	Thickness
Carbon-backed	*Do not use in high humidity environments.*	
2P	Top Bottom	40-64 g/m² (34-55 kg or 11-17 lb) 40-81 g/m² (34-70 kg or 11-22 lb)
3P	Top Middle Bottom	40-64 g/m² (34-55 kg or 11-17 lb) 40-64 g/m² (34-55 kg or 11-17 lb) 40-81 g/m² (34-70 kg or 11-22 lb)
4P	Top Middle Middle Bottom	40-64 g/m² (34-55 kg or 11-17 lb) 40-64 g/m² (34-55 kg or 11-17 lb) 40-64 g/m² (34-55 kg or 11-17 lb) 40-81 g/m² (34-70 kg or 11-22 lb)
5P	Top Middle Middle Middle Bottom	40-52 g/m² (34-45 kg or 11-14 lb) 40-52 g/m² (34-45 kg or 11-14 lb) 40-52 g/m² (34-45 kg or 11-14 lb) 40-52 g/m² (34-45 kg or 11-14 lb) 40-64 g/m² (34-55 kg or 11-17 lb)
Carbon-interleaved	*Avoid using carbon-interleaved single sheets.*	
2P	Top Carbon Bottom	35-64 g/m² (30-55 kg or 9-17 lb) Counted as one sheet 35-81 g/m² (30-70 kg or 9-22 lb)
3P	Top Carbon Middle Carbon Bottom	35-52 g/m² (30-45 kg or 9-14 lb) Counted as one sheet 35-52 g/m² (30-45 kg or 9-14 lb) Counted as one sheet 35-64 g/m² (30-55 kg or 9-17 lb)

kg: Weight in kilograms of 1000 sheets of 788 × 1091 mm paper (1.16 g/m²)

lb: Weight in pounds of 500 sheets of 17 × 22 inch paper (3.76 g/m²)

Specifications

C

COMMAND SETS

This appendix describes printer commands and their parameters.

This printer has three resident command sets:

- Fujitsu DPL24C PLUS (native command set for Fujitsu DL series printers)
- IBM Proprinter XL24E
- Epson ESC/P2

Select the same emulation on the printer and in your software. If your software emulations include DPL24C PLUS, select DPL24C PLUS for optimum performance.

FUJITSU DPL24C PLUS

This section describes the printer commands for the DPL24C PLUS command set which is the native command set of this printer.

Function	Command
Print Mode Control	
Double-strike (bold) printing on	ESC G
Double-strike (bold) printing off	ESC H
Emphasized (shadow) printing on	ESC E
Emphasized (shadow) printing off	ESC F
Italic printing on	ESC 4
Italic printing off	ESC 5
Select character style and screening	ESC e S (n_1) (n_2)
$n_1 = 0$: Normal	
1: Outline	
2: Shaded	
3: Outline and shaded	
4: Thin outline	
5: Thin shaded	
6: Thin outline and shaded	
$n_2 = 0$: Transparent	
1: Light dot matrix	
2: Heavy dot matrix	
3: Vertical bars	
4: Horizontal bars	
5: Slants	
6: Back slants	
7: Lattice	
One-line double width characters on	SO or ESC SO
One-line double width characters off	DC 4
Double width characters on/off (on: $n = 1$, off: $n = 0$)	ESC W (n)

Function	Command
Double-height characters on/off (on: n = 1, off: n =0) This command does not adjust the line spacing.	ESC V (n)
Multiwidth and height printing n = 0: Not adjusted 1: Character pitch multiplied 2: Line spacing multiplied 3: Character pitch and line spacing multiplied h_1: Tens digit of horizontal multiple h_2: Units digit of horizontal multiple v_1: Tens digit of vertical multiple v_2: Units digit of vertical multiple ($0 \leq h_1\ h_2$ or $v_1\ v_2 \leq 11$)	ESC u (n) (h_1) (h_2) (v_1) (v_2)
Condensed characters on	SI or ESC SI
Condensed characters off	DC2
Subscript or superscript printing on (subscript: n=1, superscript: n=0)	ESC S (n)
Subscript and superscript printing off	ESC T
Select underline type n = 0: Single line 1: Bold single line 2: Extremely bold single line 3: Double line 4: Bold double line 5: Extremely bold double line	ESC e U (n)
Underline on/off (on: n=1, off: n=0)	ESC - (n)
Overline on/off (on: n=1, off: n=0)	ESC e o (n)

Function	Command
Select printing style This command allows you to combine various printing styles. The value of *n* is the sum of the values of the styles you want to combine. *n* = 0: Pica pitch 1: Elite pitch 4: Condensed 8: Shadow 16: Bold 32: Double width 64: Proportional	ESC ! (*n*)
Select image overlay type This command allows you to overlay a pattern on characters. *n* = 1: Light dot matrix 2: Heavy dot matrix 3: Vertical bars 4: Horizontal bars 5: Slants 6: Back slants 7: Lattice	ESC e I (*n*)
Image overlay printing on/off (on: *n*=1, off: *n*=0)	ESC e L (*n*)
Horizontal Control	
Space	SP
Backspace	BS
Carriage return	CR
Elite pitch (12 cpi)	ESC M
Pica pitch (10 cpi)	ESC P
Proportionally spaced characters on/off (on: *n*=1, off: *n*=0)	ESC p (*n*)
Set character pitch to (n-1)/120 inch ($1 \leq n \leq 127$)	ESC US (*n*)
Set character pitch to n/180 inch ($0 \leq n \leq 255$)	ESC h (*n*)

Function	Command
Set character offset to n/120 inch Cancelled by CR or ESC x. $(0 \le n \le 63)$ $(64 \le n \le 127)$	ESC DC1 (n)
Set character pitch to n/360 inch $(0 \le n_1\ n_2\ n_3 \le 999)$ n_1, n_2, and n_3 are the hundreds, tens, and units digits.	ESC e H (n_1) (n_2) (n_3)
Vertical Control	
Line feed	LF
Reverse line feed	ESC LF
Form feed	FF
Advance paper n/180 inch $(0 \le n \le 255)$	ESC J (n)
Reverse paper n/180 inch $(0 \le n \le 255)$	ESC j (n)
Advance paper n/360 inch $(0 \le n_1\ n_2\ n_3 \le 999)$ n_1, n_2, and n_3 are the hundreds, tens, and units digits.	ESC e J (n_1) (n_2) (n_3)
Reverse paper n/360 inch $(0 \le n_1\ n_2\ n_3 \le 999)$ n_1, n_2, and n_3 are the hundreds, tens, and units digits.	ESC e j (n_1) (n_2) (n_3)
Set line spacing to 1/8 inch (8 lpi)	ESC 0
Set line spacing to n/180 inch $(0 \le n \le 255)$	ESC 3 (n)
Set line spacing to 7/60 inch	ESC 1
Set line spacing to n/60 inch $(0 \le n \le 127)$	ESC A (n)
Set line spacing to 1/6 inch (6 lpi) or to the value set with the ESC A command. The preset line spacing command is ESC A (n).	ESC 2
Set line spacing to n/360 inch $(0 \le n_1\ n_2\ n_3 \le 999)$ n_1, n_2, and n_3 are the hundreds, tens, and units digits.	ESC e V (n_1) (n_2) (n_3)
Set line spacing to n/360 inch $(1 \le n \le 255)$	FS 3 (n)

Command Sets

Function	Command
Tabulation	
Horizontal tab execution	HT
Set horizontal tabs	ESC D (n_1) ... (n_k)
The values of n_1 to n_k in this command are the ASCII values of the print columns (at the current character width) at which tabs are to be set.	NUL
($1 \le n \le 255$) ($1 \le k \le 255$)	
Move to print column n ($1 \le n \le 255$)	ESC HT (n)
Move dot column n/360 inch	ESC $ (n_1) (n_2)
($n = n_1 + n_2 \times 256$)	
The value below is for 136-column printers.	
($0 \le n_1$ 255) ($0 \le n_2 \le 19$)	
($0 \le n_2 \times 256 + n_1 \le 4895$)	
Horizontal relative move by n/360 inch	ESC e R (s)
($-999 \le n_1\ n_2\ n_3 \le +999$)	(n_1) (n_2) (n_3)
n_1, n_2, and n_3 are the hundreds, tens, and units digits of the distance. s is a plus or minus (+ or –) sign.	
Vertical tab execution	VT
Set vertical tabs	ESC B (n_1) ... (n_k)
The values of n_1 to n_k in this command are the ASCII values of the lines (at the current line spacing) at which tabs are to be set.	NUL
($1 \le n \le 255$) ($1 \le k \le 64$)	
Move to line n ($1 \le n \le 255$)	ESC VT (n)
Page Formatting	
Set right margin ($0 \le n \le 255$)	ESC Q (n)
Set left margin ($0 \le n \le 255$)	ESC l (n)
Set perforation skip by n lines	ESC N (n)
($1 \le n \le 127$)	
Perforation skip off	ESC O
Set page length to n lines	ESC C (n) or
($1 \le n \le 127$)	ESC e C (n) or
	ESC FF (n)

Function	Command
Set page length to n inches $(1 \le n \le 22)$ Set page length to n/360 inch $(n = n_1 \times 256 + n_2)$ $(0 \le n_1\ n_2 \le 255)$ $(1 \le n_1 \times 256 + n_2 \le 7920)$	ESC C NUL (n) or ESC e C NUL (n) or ESC FF NUL (n) ESC c f (n_1) (n_2)
Color Selection Select printing color $n = 0$: Black 1: Magenta (red) 2: Cyan (blue) 3: Violet 4: Yellow 5: Orange 6: Green	 ESC r (n)
Character Set Control Select character set 1 Appendix E gives the character sets Select character set 2 Appendix E gives the character sets. Select international character set $n = 0$: USA 1: France 2: Germany 3: United Kingdom 4: Denmark 1/Norway 5: Sweden/Finland 6: Italy 7: Spain 8: Denmark 2 Clear print buffer Select printer Deselect printer (ignore input) Force most significant bit to 1 Force most significant bit to 0 Cancel control over most significant bit	 ESC 7 ESC 6 ESC R (n) CAN DC1 DC3 ESC > ESC = ESC #

Command Sets

Function	Command
Select code table n = 0: Code page 437 1: Code page 850 2: Code page 860 3: Code page 863 4: Code page 865 5: ISO 8859-1/ECMA 94	ESC e C (n)
Select extended character by character number ($0 \leqq n_1n_2n_3 \leqq 664$) n_1, n_2, and n_3 are the hundreds, tens, and units digits.	ESC e E (n_1) (n_2) (n_3)
Word Processing	
Line justification on	ESC m
Automatically center printing	ESC c
Reset word processing features	ESC x
Font Selection and Downloading	
Select font m with source and style set by n • m (bits 0 and 1: Font device selection)	ESC % (m) (n)

Bit 1	Bit 0	Selection of font
0	0	Resident font
0	1	Downloaded font
1	0	Resident font

• m (bits 2 and 3: Print quality specification

Bit 3	Bit 2	Print quality
0	0	Original quality of font
0	1	Letter quality (360 dpi)
1	0	Correspondence quality (180 dpi)
1	1	Draft quality (120 dpi)

Function	Command
• n (bit 0 to 2: Specification of font number) (1) Resident fonts	

n	$m = 0, 0$	$m = 1, 0$
0	Courier 10	OCR-B
1	Prestige elite 12	OCR-A
2	Draft	
3	Compressed	
4	Boldface PS	
5	Pica 10	
6	Correspondence	
7	High-speed draft	

Function	Command
(2) Downloaded fonts $n = 0$: Downloaded font 0 1: Downloaded font 1	
Select print quality (font attributes) $n = 0$: Letter (360 × 180 dpi) 1: Correspondence (180 × 180 dpi) 2: Draft (120 × 180 dpi) 3: High-speed Draft (90 × 180 dpi)	ESC e q (n)
Select spacing mode (font attributes) $n = 0$: Fixed pitch font 1: Proportional spacing font	ESC e s (n)
Select character pitch (n/360 inch, font attributes) $(0 \le n_1 \le 255)$ $(1 \le n_2 \le 255)$ $(n = n_1 \times 256 + n_2)$ Ex. $n = 36$: 10 pitch 30: 12 pitch 24: 15 pitch 21: 17 pitch	ESC e p (n_1) (n_2)
Condense/enlarge vertically (font attributes) $n = 1$: Executed 0: Not executed	ESC e Λ (n)
Select point size (n/1200 inch, font attributes) $(0 \le n_1 \le 255)$ $(0 \le n_2 \le 255)$ $(n = n_1 \times 256 + n_2)$ Ex. $n = 166$: 10 point	ESC e v (n_1) (n_2)

Command Sets

Function	Command
Select character style (font attributes) n = 0: Upright 1: Italic	ESC e i (n)
Select stroke weight (font attributes) n = 249: –7 (reserved) 251: –5 (reserved) 253: –3 (light) 0: 0 (medium) 3: 3 (bold) 5: 5 (black) 7: 7 (ultrablack)	ESC e w (n)
Select typeface (font attributes) n = 1: Pica 3: Courier (bitmap) 4: Nimbus Sans ® 5: Timeless 8: Prestige 23: Boldface 130: OCR-A 131: OCR-B 134: Courier (scalable)	ESC e t (n)
Select font by I.D. (font attributes)	ESC e F (n)

n	Quality	Spacing	Pitch	Point	Typeface
1	LQ	Fixed	10 cpi	12 pt	Courier (bitmap)
2	LQ	Fixed	12 cpi	10 pt	Prestige
3	LQ	PS	-	12 pt	Boldface
4	LQ	Fixed	10 cpi	12 pt	Pica
9	LQ	Fixed	10 cpi	12 pt	OCR-A
10	LQ	Fixed	10 cpi	12 pt	OCR-B
32	CQ	Fixed	10 cpi	12 pt	Courier (bitmap)
34	DQ	Fixed	12 cpi	11 pt	Gothic
128	LQ	PS	–	10 pt	Timeless
129	LQ	PS	–	10 pt	Timeless Italic
130	LQ	PS	–	10 pt	Timeless Bold
132	LQ	PS	–	10 pt	Nimbus Sans ®
133	LQ	PS	–	10 pt	Nimbus Italic
134	LQ	PS	–	10 pt	Nimbus Bold
140	LQ	Fixed	10 cpi	10 pt	Courier (scalable)
141	LQ	Fixed	10 cpi	10 pt	Courier Bold (scalable)
142	LQ	Fixed	10 cpi	10 pt	Courier Italic (scalable)

Function	Command
Copy resident font to download area *m* = 0: Courier 10 1: Prestige Elite 12 2: Draft 3: Compressed 4: Boldface PS 5: Pica 10 6: Correspondence 7: High-speed Draft *n* = 0: Downloaded font 0 1: Downloaded font 1	ESC : NUL (*m*) (*n*)
Create download font • *m* (bits 4 and 5: Specifies the quality of characters to be registered)	ESC & (*m*) (*Cs*) (*Ce*) (*data*)

Bit 5	Bit 4	Font quality selection
0	1	Letter (360 dpi)
1	0	Correspondence (180 dpi)
1	1	Draft (120 dpi)

• *m* (bit 0: Specifies external font number to be registered)

Bit 0	Font number selection	Remarks
0	Downloaded font 0	At power on, resident font 0 is automatically downloaded.
1	Downloaded font 1	At power on, resident font 1 is automatically downloaded.

• *m* (bits 1, 2, 3, 6, 7) Not used (don't care)
• *Cs* (Download start character, ASCII code)
• *Ce* (Download end character, ASCII code)

Decimal	$0 \le Cs, Ce < 255$
Hex	$00 \le Cs, Ce \le FF$

Precaution: $Ce \geqq Cs$
• *data* (More than one byte of data containing bit map data)

(Reserved)	ESC e D (*data*);

Command Sets

Function	Command
Bit Image Graphics	
Graphics type m graphics	ESC * (*m*)
	(n_1) (n_2) (*data*)
Graphics type m graphics	ESC e b (*m*)
	(n_1) (n_2) (*data*) or
	ESC e B (*m*)
	(n_1) (n_2) (*data*)
Single-density graphics	ESC K (n_1) (n_2) (*data*)
Double-density graphics	ESC L (n_1) (n_2) (*data*)
High-speed double-density graphics	ESC Y (n_1) (n_2) (*data*)
Quadruple-density graphics	ESC Z (n_1) (n_2) (*data*)
360 dot per inch 24-pin graphics	FS Z (n_1) (n_2) (*data*)
Cut Sheet Feeder Control	
Feed a sheet from bin 1	ESC EM 1
Feed a sheet from bin 2	ESC EM 2
Feed a sheet from bin 3	ESC EM E
Eject a page from the printer	ESC EM R
Select bin 1 for following pages	/ / 1 / /
Select bin 2 for following pages	/ / 2 / /
Select bin 3 for following pages	/ / E / /
Eject sheet at end of current page	/ / R / /
Change bins at next page	/ / C / /
Cut sheet feed selection	/ / S / /
Initialize Printer	
Reset printer	ESC @
Reset printer	ESC CR P
Initialize printer	ESC SUB I
Bar Code Printing	
Print bar code	ESC DC4 (b) R
b: Total number of parameters	(*c*) (*w*) (*h*) (*a*)
R: (fixed)	(ch_1) ... (ch_n)
(To be continued)	

Function	Command
c: Type of bar code	

ASCII	Decimal	Hex	Type of bar code
1	49	31	Codebar (nw-7)
2	50	32	EAN 13
3	51	33	EAN 8
4	52	34	Code 3 to 9
5	53	35	Industrial 2 of 5
6	54	36	Interleaved 2 of 5
7	55	37	Matrix 2 of 5
A	65	41	UPC type A
B	66	42	Code 128
a	97	61	UPC type A with checkdigit printing

w: Width of narrow bar in 1/1440 inch units *h*: Height of bar code *a*: Defines check characters and OCR characters $ch_1 ... ch_n$: Bar code characters	
Miscellaneous	
Sound bell	BEL
Enable paper-out sensor	ESC 9
Ignore paper-out sensor	ESC 8
Typewriter mode on/off (on: *n*=1, off: *n*=0)	ESC i (*n*)
Move print head to home position	ESC <
Unidirectional printing on/off (on: *n*=1, off: *n*=0)	ESC U (*n*)
Select CR code definition *n* = 0: CR = CR only 1: CR = CR + LF	ESC e r (*n*)
Select LF code definition *n* = 0: LF = LF only 1: LF = LF + CR	ESC e *l* (*n*)
Enter online setup mode	ESC e ONLINE (*data*)
Move print head (unit: 1/180 inch) $(0 \le n_1 \le 255)$ $(0 \le n_2 \le 255)$	ESC e h (n_1) (n_2)

Command Sets

Factory Default Settings

The following table describes the printer commands used to control options of the items that can be selected in printer setup mode. Command parameters are omitted.

Item	Selectable options in setup mode	Command
Emulate	DPL24C+, XL24E, ESC/P2	Controllable in online setup mode
Font	COUR 10, PRSTG 12, COMPRSD, BOLDFCE, PICA 10, CORRESP, COUR-N, COUR-B, COUR-I, TIMLS-N, TIMLS-B, TIMLS-I, N.SAN-N, N.SAN-B, N.SAN-I, OCR-B, OCR-A, DOWNLD 0, DOWNLD 1	ESC e t ESC e F ESC %
Quality	LETTER, REPORT, DRAFT, HI-DRFT	ESC e q
Pitch	2.5, 3, 5, 6, 10, 12, 15, 17, 18, 20 CPI or PROP SP	ESC e p ESC e H ESC h ESC US ESC M ESC P ESC p ESC i ESC c s
Line space	1, 2, 3, 4, 5, 6, 7, 8, LPI	ESC e V ESC 0 ESC 1 ESC 2 ESC 3 ESC A
Character width	NORMAL, 2 TIMES, 4 TIMES	ESC W SO or ESC SO (DC4) ESC u ESC !
Character height	NORMAL, 2 TIMES, 4 TIMES	ESC V ESC u

Underline: Factory default
( ): Cancel command

Item	Selectable options in setup mode	Command
Attributes	NONE, ITALICS, CONDNSD, SHADOW, BOLD	ESC 4 (ESC 5) SI or ESC SI (DC2) ESC E (ESC F) ESC G (ESC H) ESC e i ESC !
Page length	3.0, 3.5, 4.0, 5.0, 5.5, 6.0, 7.0, 8.0, 8.5, 11.0, 11.6, 12.0, 14.0, 18.0 IN	ESC C NUL ESC e C NUL ESC FF NUL ESC C ESC e C ESC FF
Left end	1 , 2, 3, ... , 41 COLM	Controllable in online setup mode
Top margin	1 , 2, 3, ... , 10 LINE	Controllable in online setup mode
Language	USA, UK, GERMAN, FRENCH, ITALIAN, SPANISH, SWEDISH, FINNISH, DANISH1, DANISH2, NORWEGN, PAGE437, PAGE850, PAGE860, PAGE863, PAGE865 ISO8859, ECMA94	ESC R ESC e C
	PG852, PG852-T, PG855, PG866, HUNGARY, HUNG-T, SOLV, SOLV-T, POLISH, POLSH-T, MAZOWIA, MAZOW-T, LATIN7, LATIN2, LATN2-T, KAMENIC, KAMEN-T, TURKY, TURKY-T, CYRILIC, IBM437, IBM851, ELOT928, PG-DHN, LATIN-P, ISO-LTN, LITHUA1, LITHUA2, MIK, MACEDON, ABG, ABY, PG-MAC, ELOT927, DEC-GR, GREEK 11, PG862, HBR-OLD, HBR-DEC, ISO-TUK	Uncontrollable by commands but controllable in online setup mode

Underline: Factory default
( ): Cancel command

Command Sets

Item	Selectable options in setup mode	Command
Character set	SET 1, SET2	ESC7 ESC6
Perforation skip	SKIP, NO-SKIP	ESC N (ESC O)
Paper width	8.0 IN, 11.0 IN, 11.4 IN, 13.6 IN (8.0 IN is default for 80-column printer, and 13.6 IN is default for 136-column printer.)	Controllable in online setup mode
Zero font	NO-SLSH, SLASH	Controllable in online setup mode
DC3	ENABLE, DISABLE	Controllable in online setup mode
CR code	CR-ONLY, CR & LF	ESC e r
LF code	LF-ONLY, LF & CR	ESC e *l*
Right end wrap	WRAP, OVR-PRT	Controllable in online setup mode
Paper-out	CNTONLY, DETECT, IGNORE	ESC 9 (ESC 8)
Print direction	BI-DIR, UNI-DIR	ESC U

Underline: Factory default
( ): Cancel command

IBM PROPRINTER XL24E EMULATION

This section describes the printer commands for the IBM Proprinter XL24E emulation. Asterisks in the "Function" column indicate extended commands that are not supported by the original printer.

Function	Command
Print Mode Control	
Double-strike (bold) printing on	ESC G
Double-strike (bold) printing off	ESC H
Emphasized (shadow) printing on	ESC E
Emphasized (shadow) printing off	ESC F
One-line double-width characters on	SO or ESC SO
One-line double-width characters off	DC4
Double-width characters on/off (on: $n = 1$, off: $n = 0$)	ESC W (n)
Double-height/double-width characters $n_1 = 4$, $n_2 = 0$, $m_1 = 0$, $m_2 = 0$ m_3 controls character height and line spacing:	ESC [@ (n_1) (n_2) (m_1) ... (m_4)

m_3	Height	Spacing
0	Unchanged	Unchanged
1	Normal	Unchanged
2	Double	Unchanged
16	Unchanged	Single
17	Normal	Single
18	Double	Single
32	Unchanged	Double
33	Normal	Double
34	Double	Double

m_4 controls character width:

m_4	Width
0	Unchanged
1	Normal
2	Double

Command Sets

Function	Command
Condensed characters on	SI or ESC SI
Condensed and elite characters off	DC2
Subscript or superscript printing on (subscript: $n = 1$, superscript: $n = 0$)	ESC S (n)
Subscript and superscript printing off	ESC T
Underline on/off (on: $n = 1$, off: $n = 0$)	ESC - (n)
Overline on/off (on: $n = 1$, off: $n = 0$)	ESC _ (n)
Horizontal Control	
Space	SP
Backspace	BS
Carriage return	CR
Elite characters on	ESC :
Proportionally spaced characters on/off (on: $n = 1$, off: $n = 0$)	ESC P (n)
Vertical Control	
Line feed	LF
Form feed	FF
Advance paper n/216 inch ($1 \leq n \leq 255$)	ESC J (n)
Advance paper n/180 inch (in AG mode) ($1 \leq n \leq 255$)	ESC J (n)
Set line spacing to 1/8 lines	ESC 0
Set line spacing to 7/72 inch	ESC 1
Set line spacing to n/216 inch ($0 \leq n \leq 255$)	ESC 3 (n)
Set line spacing to n/180 inch (in AG mode) ($0 \leq n \leq 255$)	ESC 3 (n)
Preset line spacing to n/72 inch ($1 \leq n \leq 255$)	ESC A (n)
Preset line spacing to n/60 inch (in AG mode) ($1 \leq n \leq 255$)	ESC A (n)
Set line spacing to 1/6 inch or to the value preset by line spacing command ESC A (n)	ESC 2

Function	Command
Change graphics line spacing base to 1/216 or 1/180 inch (for ESC J and ESC 3) $m_1 = 4$, $m_2 = 0$ $0 \le t_1 \le 255$, $0 \le t_2 \le 255$, $t_3 = 0$ $t_4 = 180$ or 216	ESC [\ (m_1) (m_2) (t_1) ... (t_4)
Tabulation	
Horizontal tab execution	HT
Set horizontal tabs The values of n_1 to n_k in this command are the ASCII values of the print columns (at the current character width) at which tabs are to be set. ($1 \le n \le 255$) ($1 \le k \le 28$)	ESC D (n_1) ... (n_k) NUL
Clear all horizontal tabs	ESC D NUL
Move print position right by n/120 inch ($0 \le n_1, n_2 \le 255$) ($n = n_1 + n_2 \times 256$)	ESC d (n_1) (n_2)
Vertical tab execution	VT
Set vertical tabs The values of n_1 to n_k in this command are the ASCII values of the lines (at the current line spacing) at which tabs are to be set. ($1 \le n \le 255$) ($1 \le k \le 64$)	ESC B (n_1)... (n_k) NUL
Clear all vertical tabs	ESC B NUL
Reset tabs to default values	ESC R
Page Formatting	
Set left margin at column n and right margin at column m ($0 \le n, m \le 255$)	ESC X (n) (m)
Set perforation skip by n lines ($1 \le n \le 255$)	ESC N (n)
Perforation skip off	ESC O
Set page length to n lines ($1 \le n \le 255$)	ESC C (n)
Set page length to n inches ($1 \le n \le 22$)	ESC C NUL (n)
Set top of form	ESC 4

Function	Command
Color Selection*	
Select print color* $n = 0$: Black 1: Magenta (red) 2: Cyan (blue) 3: Violet 4: Yellow 5: Orange 6: Green	ESC r (n)
Character Set Control	
Select character set 1	ESC 7
Select character set 2	ESC 6
Print $n_1 + n_2 \times 256$ characters from all-character set (*chars.*: codes of characters to print, $0 \leq chars. \leq 255$)	ESC \ (n_1) (n_2) (*chars.*)
Print a character from all-character set (*char.*: a code of character to print, $0 \leq char. \leq 255$)	ESC ^ (*char.*)
Select code page table n ($0 \leq n_1, n_2 < 255$) ($n = n_1 + n_2 \times 256$)	ESC [T (n_1) (n_2) 0 0 (c_1) (c_2)

c_1	c_2	Code page ID
0	0	Ignore command
1	181	Code page 437
3	82	Code page 850
3	92	Code page 860
3	95	Code page 863
3	97	Code page 865

Clear input buffer	CAN
Select printer	DC1
Deselect printer (ignore input)	ESC Q #

Function	Command
Downloading	
Select resident or downloaded font	ESC I (n)
Ex. n = 0: Resident Draft	
2: Resident Courier	
4: Downloaded Draft	
6: Downloaded Courier	
Create download font	ESC = (n_1) (n_2) ID (m_1) (m_2) (*data*)
Bit Image Graphics	
Single-density graphics	ESC K (n_1) (n_2) (*data*)
Double-density graphics	ESC L (n_1) (n_2) (*data*)
High-speed double-density graphics	ESC Y (n_1) (n_2) (*data*)
Quadruple-density graphics	ESC Z (n_1) (n_2) (*data*)
High-resolution graphics	ESC [g (n_1) (n_2) (m) (*data*)
Select graphics mode (in AG mode only)	ESC * (m) (c_1) (c_2) (*data*)
Cut Sheet Feeder Control*	
Feed a sheet from bin 1*	ESC EM 1
Feed a sheet from bin 2*	ESC EM 2
Feed a sheet from bin 3*	ESC EM E
Eject a page from the printer*	ESC EM R
Select bin 1 for following pages*	//1//
Select bin 2 for following pages*	//2//
Select bin 3 for following pages*	//E//
Eject sheet at end of current page*	//R//
Change bins at next page*	//C//
Cut sheet feed selection*	//S//
Miscellaneous	
Sound the bell	BEL
Unidirectional printing on/off (on: n = 1, off: n = 0)	ESC U (n)
Add a carriage return to all line feeds (on: n = 1, off: n = 0)	ESC 5 (n)
Printer offline	ESC j
Enter online setup mode*	ESC e ONLINE (*data*)
Select default settings	ESC [K (n_1) (n_2) (i) (ID) (p_1) (p_2)

Command Sets

EPSON ESC/P2 EMULATION

This section describes the printer commands for the Epson ESC/P2 emulation. Asterisks in the "Function" column indicate extended commands that are not supported by the original printer.

Function	Command
Print Mode Control	
Double-strike (bold) printing on	ESC G
Double-strike (bold) printing off	ESC H
Emphasized (shadow) printing on	ESC E
Emphasized (shadow) printing off	ESC F
Italic printing on	ESC 4
Italic printing off	ESC 5
Select character style	ESC q (*n*)
n = 0: Normal	
1: Outlined	
2: Shaded	
3: Outlined and shadowed	
One-line double-width characters on	SO or ESC SO
One-line double-width characters off	DC4
Double-width characters on/off	ESC W (*n*)
(on: *n* = 1, off: *n* = 0)	
Double-height characters on/off	ESC w (*n*)
(on: *n* = 1, off: *n* = 0)	
Condensed characters on	SI or ESC SI
Condensed characters off	DC2
Subscript or superscript printing on	ESC S (*n*)
(subscript: *n* = 1, superscript: *n* = 0)	
Subscript and superscript printing off	ESC T
Underline on/off	ESC - (*n*)
(on: *n* = 1, off: *n* = 0)	

Function	Command
Select line $n_1 = 3, n_2 = 0, d_1 = 1$ d_2 = 0: Ignore command 1: Underline 2: Strike through 3: Overscore d_3 = 0 or 4: Cancel line selection 1: Single line 2 or 3: Double line 5: Single-dotted line 6 or 7: Double-dotted line	ESC (- (n_1) (n_2) (d_1) (d_2) (d_3)
Select printing style This command allows you to combine various printing styles. The value of n is the sum of the values of the styles you want to combine. n = 0: Pica pitch 1: Elite pitch 2: Proportional spacing 4: Condensed 8: Shadow 16: Bold 32: Double-width 64: Italics 128: Underline	ESC ! (n)
Horizontal Control	
Space	SP
Backspace	BS
Carriage return	CR
Set elite pitch	ESC M
Set pica pitch	ESC P
Set 15 CPI	ESC g
Proportionally spaced characters on/off (on: n = 1, off: n = 0)	ESC p (n)
Set inter-character space to n/120 inch (for draft) or n/180 inch (for letter and proportional) ($0 \le n \le 127$)	ESC SP (n)

Command Sets

Function	Command
Set character pitch to $(n_1 + n_2 \times 256)/360$ inch $(0 \le n_1 \le 255)$ $(0 \le n_2 \le 4)$	ESC c (n_1) (n_2)
Select character pitch (specify unit o pitch) $n_1 = 1$, $n_2 = 0$ d = 10 to 19: 10/3600 inch = 1/360 inch d = 20 to 29: 20/3600 inch = 1/180 inch d = 30 to 39: 30/3600 inch = 1/120 inch d = 40 to 49: 40/3600 inch = 1/90 inch d = 50 to 59: 50/3600 inch = 1/72 inch d = 60 to 69: 60/3600 inch = 1/60 inch	ESC (U (n_1) (n_2) (d)
Vertical Control	
Line feed	LF
Form feed	FF
Advance paper n/180 inch $(1 \le n \le 255)$	ESC J (n)
Set line spacing to 1/8 inch	ESC 0
Set line spacing to n/180 inch $(0 \le n \le 255)$	ESC 3 (n)
Set line spacing to n/60 inch $(0 \le n \le 127)$	ESC A (n)
Set line spacing to 1/6 inch	ESC 2
Set line spacing to n/360 inch $(0 \le n \le 255)$	ESC + (n)
Tabulation	
Horizontal tab execution	HT
Set horizontal tabs	ESC D
The values of n_1 to n_k in this command are the ASCII values of the print columns (at the current character width) at which tabs are to be set. $(1 \le n \le 255)$ $(1 \le k \le 32)$	(n_1) ... (n_k) NUL
Move print position n/60[*1] inch right from left margin $(n = n_1 + n_2 \times 256)$	ESC \$ (n_1) (n_2)
Move print position n/120[*1] inch (for draft) or n/180[*1] inch (for letter) left or right from the current position $(n = n_1 + n_2 \times 256)$	ESC \ (n_1) (n_2)
Vertical tab execution	VT

*1 This pitch is the default, but can be changed by the ESC (U command beforehand.

Function	Command
Set vertical tabs The values of n_1 to n_k in this command are the ASCII values of the lines (at the current line spacing) at which tabs are to be set. $(1 \le n \le 255)$ $(1 \le k \le 16)$	ESC B (n_1) ... (n_k) NUL
Move to dot line $(d_1 + d_2 \times 256)/360$[*1] inch $n_1 = 2, n_2 = 0$ $(0 \le d_1 \le 255)$ $(0 \le d_2 \le 127)$	ESC (V (n_1) (n_2) (d_1) (d_2)
Vertical relative move by $(d_1 + d_2 \times 256)/360$[*1] inch $n_1 = 2, n_2 = 0$ $(0 \le d_1 \le 255)$ $(0 \le d_2 \le 127)$ $-32768 \le d_1 + d_2 \times 256 \le 32768$	ESC (v (n_1) (n_2) (d_1) (d_2)
Page Formatting	
Set right margin to column n $(1 \le n \le 255)$	ESC Q (n)
Set left margin to column n $(0 \le n \le 255)$	ESC l (n)
Set top and bottom margins from top of page $n_1 = 4, n_2 = 0$ • Top margin $=(t_1 + t_2 \times 256)/360$[*1] inch $(0 \le t_1 \le 255)$ $(0 \le t_2 \le 127)$ • Bottom margin $=(b_1 + b_2 \times 256)/360$[*1] inch $(0 \le b_1 \le 255)$ $(0 \le b_2 \le 127)$	ESC (c (n_1) (n_2) (t_1) (t_2) (b_1) (b_2)
Set perforation skip by n lines $(1 \le n \le 127)$	ESC N (n)
Perforation skip off	ESC O
Set page length to n lines $(1 \le n \le 127)$	ESC C (n)
Set page length to n inches $(1 \le n \le 22)$	ESC C NUL (n)
Set page length to $(d_1 + d_2 \times 256)/360$[*1] inch $n_1 = 2, n_2 = 0$ $(0 \le d_1 \le 255)$ $(0 \le d_2 \le 127)$	ESC (C (n_1) (n_2) (d_1) (d_2)

*1 This pitch is the default, but can be changed by the ESC (U command beforehand.

Command Sets

Function	Command
Color Selection	
Select print color	ESC r (*n*)
n = 0: Black	
1: Magenta (red)	
2: Cyan (blue)	
3: Violet	
4: Yellow	
5: Orange	
6: Green	
Character Set Control	
Select character set 1	ESC 7
Select character set 2	ESC 6
Select character set table	ESC t (*n*)
n = 0: Italics character set	
1: Graphics character set	
2: Downloaded character set	
3: Graphics character set	
Select international character set	ESC R (*n*)
n = 0: USA	
1: France	
2: Germany	
3: United Kingdom	
4: Denmark 1	
5: Sweden	
6: Italy	
7: Spanish 1	
8: Japan	
9: Norway	
10: Denmark 2	
11: Spanish 2	
12: Latin America	
13: Korea	
64: Legal	

Function	Command
Assign a character set to active character set number 0 to 3 $n_1 = 3, n_2 = 0$ $d_1 =$ 0: Active character set number 0 1: Active character set number 1 2: Active character set number 2 3: Active character set number 3 $d_2 =$ 0: Italic 1: PC 437 (USA) 3: PC 850 (Multilingual) 7: PC 860 (Portugal) 8: PC 863 (Canada-French) 9: PC 865 (Norway) $d_3 = 0$	ESC (t (n_1) (n_2) (d_1) (d_2) (d_3)
Print $n_1 + n_2 \times 256$ characters from all-character set $(0 \le n_1 \le 255)$ $(0 \le n_2 \le 127)$ $(0 \le n_1 + n_2 \times 256 \le 255)$ $(0 \le$ *character codes* $\le 254)$	ESC (^ (n_1) (n_2) (*character codes*)
Clear input buffer	CAN
Delete a character	DEL
Force most significant bit to 1	ESC >
Force most significant bit to 0	ESC =
Cancel control over most significant bit	ESC #
Font Selection and Downloading	
Select font $n = 0$: Resident character set 1: Downloaded character set	ESC % (n)
Select letter or draft quality $n = 0$: Draft 1: Letter	ESC x (n)

Command Sets

Function	Command
Select type style •Bitmap font: n = 0: Courier 1: Courier 2: Courier 3: Prestige 4: Courier 5: OCR-B 6: OCR-A 7: Courier 8: Courier 9: Courier •Scalable font: n = 0: Timeless 1: Nimbus Sans ® 2: Courier 3: Timeless 4: Timeless 5: Timeless 6: Timeless 7: Timeless 8: Timeless 9: Timeless	ESC k (n)
Set scalable font mode • m sets character pitch. m = 0: Keep previous pitch 1: Set proportional space mode m ≥ 5: Select character pitch (m/360 inch) (Reset proportional space mode) • n_1 and n_2 set point size of font. Point size = $(n_1 + n_2 \times 256) \times 0.5$ point $(0 \le n_1 < 255)$ $(0 \le n_2 \le 127)$	ESC X m (n_1) (n_2)
Copy resident character set to download area	ESC : NUL (n) (s)
Create download font	ESC & NUL (n_1) (n_2) (d_0) (d_1) (d_2) (*data*)

Function	Command
Bit Image Graphics	
Graphics type m graphics	ESC * (m) (n_1) (n_2) (*data*)
Bit image mode definition	ESC ? (s) (n)
Single-density graphics	ESC K (n_1) (n_2) (*data*)
Double-density graphics	ESC L (n_1) (n_2) (*data*)
High-speed double-density graphics	ESC Y (n_1) (n_2) (data)
Quadruple-density graphics	ESC Z (n_1) (n_2) (*data*)
Select raster image graphics $n_1 = 1, n_2 = 0$ $d = 1$: Raster image graphics mode	ESC (G (n_1) (n_2) (d)
Print raster image graphics	ESC . (c) (v) (h) (m) (n_1) (n_2) (*data*)
Cut Sheet Feeder Control	
Feed a sheet from bin 1	ESC EM 1
Feed a sheet from bin 2	ESC EM 2
Feed a sheet from bin 3 *	ESC EM E
Eject a page from the printer	ESC EM R
Select bin 1 for following pages *	//1//
Select bin 2 for following pages *	//2//
Select bin 3 for following pages *	//E//
Eject sheet at end of current page *	//R//
Change bins at next page *	//C//
Cut sheet feed selection *	//S//
Miscellaneous	
Sound the bell	BEL
Move print head to home position	ESC <
Unidirectional printing on/off (on: $n = 1$, off: $n = 0$)	ESC U (n)
Initialize printer	ESC @
Enter online setup mode *	ESC e ONLINE (*data*)

* Indicates extended commands not supported by the original printer.

Command Sets

INTERFACE INFORMATION

This printer can communicate with a computer through either a Centronics parallel interface or an RS-232C serial interface. You can specify the interface selection mode so that the printer uses either interface or it can automatically select the interface from which it first receives data.

This appendix provides information you may need for wiring your own interface cables or for programming computer-to-printer communications. Most users do not need the information in this appendix. To simply connect your printer to your computer, follow the instructions in Chapter 2.

PARALLEL INTERFACE

This parallel interface can operate in the following two modes:

- **Unidirectional (forward channel) mode or conventional mode:** This printer supports a conventional Centronics interface.
- **Bidirectional (forward/reverse channel) mode or nibble mode:** This printer supports a bidirectional communication per Nibble mode of the IEEE 1284 Standard.

The cable connector at the printer side should be a shielded, Amphenol DDK 57FE-30360 or equivalent.

The connector pin assignments are given in the following tables by modes. In the tables:

- "Input" denotes a signal from the computer to the printer.
- "Output" denotes a signal from the printer to the computer.
- The return lines specified in the second column represent twisted pairs, with one side connected to signal ground.
- The standard signal levels are 0.0 to +0.4 V (low), and +2.4 to +5.0 V (high).

Compatible Mode

Pin No.	Return Pin No.	Signal name	Direction	Description
1	19	Data Strobe (DSTB)	Input	This signal is a strobe pulse for reading data (Data 1 to 8). The printer reads data when this signal is low. The pulse width must be 1 µs or more at the receiving terminal.
2–9	20--27	Data 1 to 8	Input	Data 8 (pin 9) is the most significant bit; however, this pin is not used in 7-bit ASCII communications. Logical 1 signals must go high at least 1 µs before the falling edge of the Data Strobe signal and must stay high for at least 1 µs after the rising edge.
10	28	Acknowledge (ACK)	Output	This pulse signal indicates that the printer has received data and is ready to accept the next set of data. This signal is also sent when the printer is switched from offline to online.
11	29	Busy	Output	Data cannot be received when this signal is high. This signal is high during data entry, when the printer is offline, when the buffer is full, or when an error occurs.
12	30	Paper Empty (PE)	Output	This signal is high when the printer is out of paper.

Pin No.	Return Pin No.	Signal name	Direction	Description
13	–	Select (SLCT)	Output	This signal is high when the printer is online.
14	–	$\overline{\text{Auto Feed XT}}$	Input	Not used
15	–	–	–	No connection
16	–	Signal Ground	–	Logic ground level (0 V)
17	–	Frame Ground	–	Printer chassis ground line. FG and SG are connected.
18	–	+5V	Output	+5 V source (up to 300 mA)
19–30	–	Signal Ground	–	Twisted pair return lines
31	–	$\overline{\text{Input Prime}}$ (INPRM)	Input	If this signal is low for more than 50 µs, the printer is reset to the initial condition and is placed online.
32	–	$\overline{\text{Fault}}$	Output	This signal is low when the printer is offline, paper is out, or when there is a printer error.
33	–	Signal Ground	–	Logic ground level (0 V)
34	–	–	–	No connection
35	–	+5 VR	Output	Pulled up to +5 V through a 3.3 kΩ resistor
36	–	$\overline{\text{SLCT-IN}}$	Input	Not used

Nibble Mode

Pin numbers 2 to 9, 15 to 31, and 33 to 35 are the same as the conventional mode.

Pin No.	Return Pin No.	Signal name	Direction	Description
1	19	Host Clock	Input	This signal is set high when the host requests the reverse data transfer phase (nibble mode).
10	28	Printer Clock	Output	Reverse data transfer phase: This signal goes high when data being sent to the host is established. Reverse idle phase: This signal is set low then goes high to interrupt the host, indicating that data is available.
11	29	Printer Busy	Output	Reverse data transfer phase: Data bit 3, data bit 7, then forward path (host to printer) busy status
12	30	Ack Data Req	Output	Reverse data transfer phase: Data bit 2, then data bit 6 Reverse idle phase: This signal is set high until the host requests data and, after that, follows the Data Available signal.
13	–	X Flag	Output	Reverse data transfer phase: Data bit 1, then data bit 5

Pin No.	Return Pin No.	Signal name	Direction	Description
14	–	Host Busy	Input	Reverse data transfer phase: This signal is set low when the host can receive data, and goes high when the host has received data. Following a reverse data transfer, the interface enters the reverse idle phase when the Host Busy signal goes low and the printer has no data. Reverse idle phase: This signal goes high when the Printer Clock signal goes low so that the interface re-enters the reverse data transfer phase. If it goes high with the 1284 Active signal low, the 1284 idle phase is aborted and the interface returns to the compatibility mode.
32	–	$\overline{\text{Data Available}}$	Output	Reverse data transfer phase: This signal is set low when the printer is ready to send data to the host. During the data transfer, it is used as data bit 0 (LSB), then data bit 4. Reverse idle phase: This signal is used to indicate that data is available.
36	–	1284 Active	Input	This signal goes high to cause the printer to enter the reverse data transfer phase (nibble mode).

Data Transmission Timing

In unidirectional mode (conventional Centronics interface), this printer guarantees the received data when the Data and Data Strobe signals from the computer have the following timing with respect to the Busy and Acknowledge signals from the printer.

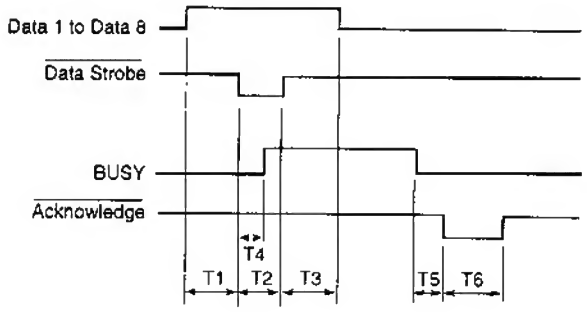

T1, T2, T3 > 1 μs
T4 < 1 μs
0 μs < T5 < 3 μs
2 μs < T6 < 6 μs

In bidirectional mode (nibblemode), this printer can send data to the computer. Data is sent in units of four bits (nibble) using four output signal lines as data paths. The following outlines one byte of data sent during reverse data transfer phase in nibble mode.

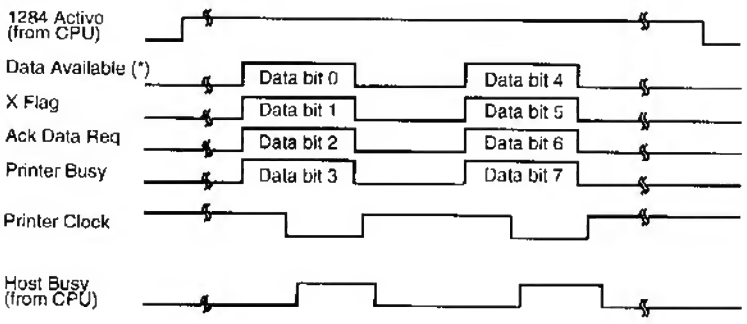

* Data Available is assigned for the cable.

SERIAL INTERFACE

RS-232C is the standard serial interface for data terminal equipment. The cable connector at the printer side should be a D-subminiature Cannon or Cinch DB-25P male connector or equivalent that conforms to EIA standards.

The table that follows shows the pin assignments commonly used by most computers. In the table:

- "Input" denotes a signal from the computer to the printer.
- "Output" denotes a signal from the printer to the computer.
- The signal level for mark state (logical 1) is -3 V or lower; for space state (logical 0), it is +3 V or higher.

Pin No.	Signal Name	Direction	Description
1	FG	–	Frame Ground
2	TD	Output	Transmitted Data. This pin carries information from the printer to the computer.
3	RD	Input	Received Data. This pin carries information from the computer to the printer.
4	RTS	Output	Request To Send. Spaces are sent when the printer is ready to transmit data.
5	CTS	Input	Clear To Send. Spaces are sent when the computer is ready to receive data.
6	DSR	Input	Data Set Ready. Spaces are sent when the computer has been powered on and is ready to receive or transmit data.
7	SG	–	Signal Ground (common return)
8	CD	Input	Carrier Detect. Spaces are sent when the computer allows the printer to receive data.
11	RC	Output	Reverse Channel. This signal is used instead of the DTR signal in the RC protocol. Spaces are sent when the printer is ready to receive or transmit data.
20	DTR	Output	Data Terminal Ready. Spaces are sent when the printer has been powered on and is ready to receive or transmit data.

Serial Options

The serial options for the computer and the printer must match. Use the printer control panel, the computer operating system, or your software to change options specified as "selectable."

Transmission mode:	Asynchronous, full duplex, or half duplex (selectable)
Speed:	150, 300, 600, 1200, 2400, 4800, 9600, or 19200 baud (selectable)
Data bits:	7 or 8 bits (selectable)
Parity bit:	Odd, even, mark, space, or none (selectable)
Start bit:	1 bit
Stop bit:	1 or 2 bits (selectable)
Protocol:	XON/XOFF (DC1/DC3), DTR (Data Terminal Ready), or RC (Reverse Channel) (selectable)
Buffer size:	256, 2K, 8K, 24K, 32K, 96K, or 128K bytes (selectable)

Cable Wiring

This printer allows two types of serial communication control: DSR-enabled and DSR-disabled. The type of control required is determined by your computer requirements. The type of control also affects the way the interface cable is wired. To determine whether you need DSR-enabled control or DSR-disabled control, use the printer HARDWRE function (see Chapter 5).

DSR-disabled control offers simpler cabling and communication than does DSR-enabled control. DSR-disabled control can be used to interface with an IBM PC and most other personal computers. With DSR-disabled control, the input control signals DSR, CTS, and CD are always considered high, regardless of their actual states. Therefore, no wire connection for these pins is required. The following figure shows the wiring required for connection to an IBM PC.

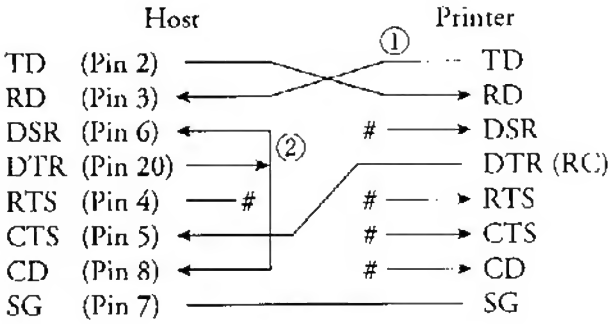

# indicates an open wire.
Wire ① is unnecessary for the DTR (or RC) protocol.
Some computers may not require wire ②.

DSR-enabled control enables communication using an RS-232C interface. The CTS and DSR input control signals are enabled; CD is ignored. DSR must be high when the printer receives data. If the printer has data to be transmitted to the computer, the printer transmits the data when both DSR and CTS are high.

When using DSR-enabled control, use a straight-through cable to connect to a DCE (data communications equipment) device. Use a null-modem cable to connect to a DTE (data terminal equipment) device, as shown below.

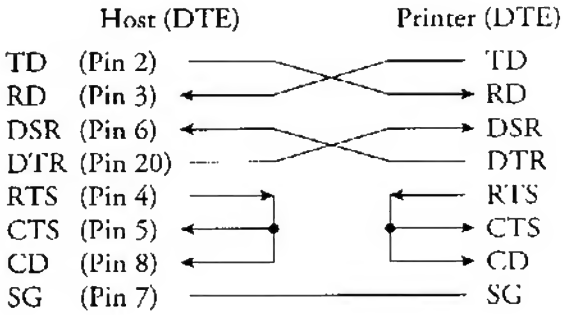

Serial Protocols

A protocol is a set of instructions that control the way data is transmitted between devices such as a computer and printer. The protocol ensures that the computer does not send information to the printer faster than the information can be processed. By telling the computer when the printer can receive data, the protocol prevents the printer's buffer from overflowing.

This printer offers a choice of four different protocols for connection to a variety of computers: XON/XOFF, DTR, and RC. If you computer documentation does not recommend a particular protocol, try DTR. The following table describes the three protocols.

Protocol	Description
XON/XOFF (DC1/DC3)	When the printer is ready to receive data, it sends the XON (DC1) code (hex 11). When fewer than 255 bytes of space remain in the buffer (or when the printer is taken offline), the printer sends the XOFF (DC3) code (hex 13). (When the input buffer is configured for 256 bytes, the buffer limit is reduced from 255 bytes to 63 bytes.) The computer must stop transmitting data within 255 (63) characters of receiving the XOFF code, or information may be lost. If paper runs out, the printer sends an NAK code (hex 15).
DTR	DTR is a hardware protocol; that is, the DTR signal on interface cable pin 20 is used to control the flow of data rather than transmission of a character code. When the printer is ready to receive data, pin 20 is high. When fewer than 255 (63) bytes of space remain in the buffer (or when the printer is taken offline), pin 20 is low. The computer must stop transmitting data within 255 (63) characters of DTR being low, or information may be lost.
RC	The RC protocol is the same as the DTR protocol, except that the Reverse Channel signal (pin 11) is used instead of the Data Terminal Ready signal (pin 20).

CHARACTER SETS

CHARACTER SETS 1 and 2 (DPL24C PLUS and IBM XL24E Emulation)

Below are character sets 1 and 2 of Code Page 437, available in the DPL24C PLUS command set and the IBM Proprinter XL24E emulation. Characters enclosed in boxes differ for sets 1 and 2. Characters in set 2 also vary with the national character set. Code Page 437 is for the USA character set.

Code Page 437 Character Set 1

LNH	0	1	2	3	4	5	6	7	8	9	A	B	C	D	E	F
0	NUL	DLE	SP	0	@	P	`	p	NUL	DLE	á	░	└	╨	α	≡
1	SOH	DC1	!	1	A	Q	a	q	SOH	DC1	í	▒	┴	╤	ß	±
2	STX	DC2	"	2	B	R	b	r	STX	DC2	ó	▓	┬	╥	Γ	≥
3	ETX	DC3	#	3	C	S	c	s	ETX	DC3	ú	│	├	╙	π	≤
4	EOT	DC4	$	4	D	T	d	t	EOT	DC4	ñ	┤	─	╘	Σ	⌠
5	ENQ	NAK	%	5	E	U	e	u	ENQ	NAK	Ñ	╡	┼	╒	σ	⌡
6	ACK	SYN	&	6	F	V	f	v	ACK	SYN	ª	╢	╞	╓	µ	÷
7	BEL	ETB	'	7	G	W	g	w	BEL	ETB	º	╖	╟	╫	τ	≈
8	BS	CAN	(	8	H	X	h	x	BS	CAN	¿	╕	╠	╪	Φ	°
9	HT	EM	)	9	I	Y	i	y	HT	EM	⌐	╣	╩	┘	Θ	•
A	LF	SUB	*	:	J	Z	j	z	LF	SUB	¬	╤	╦	┌	Ω	·
B	VT	ESC	+	;	K	[	k	{	VT	ESC	½	╥	╠	╫	δ	√
C	FF	FS	,	<	L	\	l	|	FF	FS	¼	╙	╚	╪	∞	ⁿ
D	CR	GS	-	=	M	]	m	}	CR	GS	¡	╘	╔	╪	ø	²
E	SO	RS	.	>	N	^	n	~	SO	RS	«	╒	╬	╪	ε	■
F	SI	US	/	?	O	_	o	DEL	SI	US	»	╖	╧	╪	∩	SP

Code Page 437 Character Set 2

LNH	0	1	2	3	4	5	6	7	8	9	A	B	C	D	E	F
0	NUL	DLE	SP	0	@	P	`	p	Ç	É	á	░	└	╨	α	≡
1	SOH	DC1	!	1	A	Q	a	q	ü	æ	í	▒	┴	╤	ß	±
2	STX	DC2	"	2	B	R	b	r	é	Æ	ó	▓	┬	╥	Γ	≥
3	♥	DC3	#	3	C	S	c	s	â	ô	ú	│	├	╙	π	≤
4	♦	DC4	$	4	D	T	d	t	ä	ö	ñ	┤	─	╘	Σ	⌠
5	♣	§	%	5	E	U	e	u	à	ò	Ñ	╡	┼	╒	σ	⌡
6	♠	SYN	&	6	F	V	f	v	å	û	ª	╢	╞	╓	µ	÷
7	BEL	ETB	'	7	G	W	g	w	ç	ù	º	╖	╟	╫	τ	≈
8	BS	CAN	(	8	H	X	h	x	ê	ÿ	¿	╕	╠	╪	Φ	°
9	HT	EM	)	9	I	Y	i	y	ë	Ö	⌐	╣	╩	┘	Θ	•
A	LF	SUB	*	:	J	Z	j	z	è	Ü	¬	╤	╦	┌	Ω	·
B	VT	ESC	+	;	K	[	k	{	ï	¢	½	╥	╠	╫	δ	√
C	FF	FS	,	<	L	\	l	|	î	£	¼	╙	╚	╪	∞	ⁿ
D	CR	GS	-	=	M	]	m	}	ì	¥	¡	╘	╔	╪	ø	²
E	SO	RS	.	>	N	^	n	~	Ä	₧	«	╒	╬	╪	ε	■
F	SI	US	/	?	O	_	o	DEL	Å	ƒ	»	╖	╧	╪	∩	SP

ITALIC AND GRAPHICS CHARACTER SETS (ESC/P2 EMULATION)

The following shows character sets available in the Epson ESC/P2 emulation. Characters differ in codes 128 to 255 (hex 80 to FF).

Italic Character Set

L/H	0	1	2	3	4	5	6	7	8	9	A	B	C	D	E	F
0	NUL	DLE	SP	0	@	P	`	p	NUL	DLE	SP	0	@	P	`	p
1	SOH	DC1	!	1	A	Q	a	q	SOH	DC1	!	1	A	Q	a	q
2	STX	DC2	"	2	B	R	b	r	STX	DC2	"	2	B	R	b	r
3	ETX	DC3	#	3	C	S	c	s	ETX	DC3	#	3	C	S	c	s
4	EOT	DC4	$	4	D	T	d	t	EOT	DC4	$	4	D	T	d	t
5	ENQ	NAK	%	5	E	U	e	u	ENQ	NAK	%	5	E	U	e	u
6	ACK	SYN	&	6	F	V	f	v	ACK	SYN	&	6	F	V	f	v
7	BEL	ETB	'	7	G	W	g	w	BEL	ETB	'	7	G	W	g	w
8	BS	CAN	(	8	H	X	h	x	BS	CAN	(	8	H	X	h	x
9	HT	EM	)	9	I	Y	i	y	HT	EM	)	9	I	Y	i	y
A	LF	SUB	*	:	J	Z	j	z	LF	SUB	*	:	J	Z	j	z
B	VT	ESC	+	;	K	[	k	{	VT	ESC	+	;	K	[	k	{
C	FF	FS	,	<	L	\	l	|	FF	FS	,	<	L	\	l	|
D	CR	GS	-	=	M	]	m	}	CR	GS	-	=	M	]	m	}
E	SO	RS	.	>	N	^	n	~	SO	RS	.	>	N	^	n	~
F	SI	US	/	?	O	_	o	DEL	SI	US	/	?	O	_	o	SP

Graphics Character Set 1

L/H	0	1	2	3	4	5	6	7	8	9	A	B	C	D	E	F
0	NUL	DLE	SP	0	@	P	`	p	NUL	DLE	á	▒	╚	╨	α	≡
1	SOH	DC1	!	1	A	Q	a	q	SOH	DC1	í	▓	╩	╤	ß	±
2	STX	DC2	"	2	B	R	b	r	STX	DC2	ó	═	╦	╥	Γ	≥
3	ETX	DC3	#	3	C	S	c	s	ETX	DC3	ú	╬	╠	╙	π	≤
4	EOT	DC4	$	4	D	T	d	t	EOT	DC4	ñ	╧	═	╘	Σ	⌠
5	ENQ	§	%	5	E	U	e	u	ENQ	NAK	Ñ	╨	╬	╒	σ	⌡
6	ACK	SYN	&	6	F	V	f	v	ACK	SYN	ª	╤	╫	╓	µ	÷
7	BEL	ETB	'	7	G	W	g	w	BEL	ETB	º	╥	╪	╫	τ	≈
8	BS	CAN	(	8	H	X	h	x	BS	CAN	¿	╙	╘	╪	Φ	°
9	HT	EM	)	9	I	Y	i	y	HT	EM	⌐	╘	╒	┘	Θ	∙
A	LF	SUB	*	:	J	Z	j	z	LF	SUB	¬	╒	╓	┌	Ω	·
B	VT	ESC	+	;	K	[	k	{	VT	ESC	½	╓	╫	█	δ	√
C	FF	FS	,	<	L	\	l	|	FF	FS	¼	╫	╪	▄	∞	ⁿ
D	CR	GS	-	=	M	]	m	}	CR	GS	¡	╪	╫	▌	φ	²
E	SO	RS	.	>	N	^	n	~	SO	RS	«	╪	╪	▐	ε	■
F	SI	US	/	?	O	_	o	DEL	SI	US	»	┐	▀	▐	∩	SP

Graphics Character Set 2

L/H	0	1	2	3	4	5	6	7	8	9	A	B	C	D	E	F
0	NUL	DLE	SP	0	@	P	`	p	Ç	É	á	░	└	╨	α	≡
1	SOH	DC1	!	1	A	Q	a	q	ü	æ	í	▒	┴	╤	ß	±
2	STX	DC2	"	2	B	R	b	r	é	Æ	ó	▓	┬	╥	Γ	≥
3	ETX	DC3	#	3	C	S	c	s	â	ô	ú	│	├	╙	π	≤
4	EOT	DC4	$	4	D	T	d	t	ä	ö	ñ	┤	─	╘	Σ	⌠
5	ENQ	§	%	5	E	U	e	u	à	ò	Ñ	╡	┼	╒	σ	⌡
6	ACK	SYN	&	6	F	V	f	v	å	û	ª	╢	╞	╓	µ	÷
7	BEL	ETB	'	7	G	W	g	w	ç	ù	º	╖	╟	╫	τ	≈
8	BS	CAN	(	8	H	X	h	x	ê	ÿ	¿	╕	╠	╪	Φ	°
9	HT	EM	)	9	I	Y	i	y	ë	Ö	⌐	╣	╡	┘	Θ	∙
A	LF	SUB	*	:	J	Z	j	z	è	Ü	¬	║	╢	┌	Ω	·
B	VT	ESC	+	;	K	[	k	{	ï	¢	½	╗	╖	█	δ	√
C	FF	FS	,	<	L	\	l	|	î	£	¼	╝	╕	▄	∞	ⁿ
D	CR	GS	-	=	M	]	m	}	ì	¥	¡	╜	╛	▌	φ	²
E	SO	RS	.	>	N	^	n	~	Ä	₧	«	╛	╘	▐	ε	■
F	SI	US	/	?	O	_	o	DEL	Å	ƒ	»	┐	═	▀	∩	SP

NATIONAL CHARACTER SETS (ALL EMULATIONS)

Below are the 50 national character sets available for all emulations of this printer. These character sets support different characters and symbols specific to different languages. Note that these tables are for Courier 10, a resident font, and that some national character sets do not have some characters and symbols whose use depends on resident fonts. For details, see the table at the end of this appendix.

PAGE437/USA (Code Page 437/USA)

L/H	0	1	2	3	4	5	6	7	8	9	A	B	C	D	E	F
0				0	@	P	`	p	Ç	É	á	░	└	╨	α	≡
1			!	1	A	Q	a	q	ü	æ	í	▒	┴	╤	ß	±
2			"	2	B	R	b	r	é	Æ	ó	▓	┬	╥	Γ	≥
3	♥		#	3	C	S	c	s	â	ô	ú	│	├	╙	π	≤
4	♦		$	4	D	T	d	t	ä	ö	ñ	┤	─	╘	Σ	⌠
5	♣	§	%	5	E	U	e	u	à	ò	Ñ	╡	┼	╒	σ	⌡
6	♠		&	6	F	V	f	v	å	û	ª	╢	╞	╓	µ	÷
7			'	7	G	W	g	w	ç	ù	º	╖	╟	╫	τ	≈
8			(	8	H	X	h	x	ê	ÿ	¿	╕	╚	╪	Φ	°
9			)	9	I	Y	i	y	ë	Ö	⌐	╣	╔	┘	Θ	•
A			*	:	J	Z	j	z	è	Ü	¬	║	╩	┌	Ω	·
B			+	;	K	[	k	{	ï	¢	½	╗	╦	█	δ	√
C			,	<	L	\	l	|	î	£	¼	╝	╠	▄	∞	ⁿ
D			-	=	M	]	m	}	ì	¥	¡	╜	═	▌	φ	²
E			.	>	N	^	n	~	Ä	₧	«	╛	╬	▐	ε	■
F			/	?	O	_	o		Å	ƒ	»	┐	╧	▀	∩	

UK (British English)

L/H	0	1	2	3	4	5	6	7	8	9	A	B	C	D	E	F
0				0	@	P	`	p	Ç	É	á	░	└	╨	α	≡
1			!	1	A	Q	a	q	ü	æ	í	▒	┴	╤	ß	±
2			"	2	B	R	b	r	é	Æ	ó	▓	┬	╥	Γ	≥
3	♥		£	3	C	S	c	s	â	ô	ú	│	├	╙	π	≤
4	♦		$	4	D	T	d	t	ä	ö	ñ	┤	─	╘	Σ	⌠
5	♣	§	%	5	E	U	e	u	à	ò	Ñ	╡	┼	╒	σ	⌡
6	♠		&	6	F	V	f	v	å	û	ª	╢	╞	╓	µ	÷
7			'	7	G	W	g	w	ç	ù	º	╖	╟	╫	τ	≈
8			(	8	H	X	h	x	ê	ÿ	¿	╕	╚	╪	Φ	°
9			)	9	I	Y	i	y	ë	Ö	⌐	╣	╔	┘	Θ	•
A			*	:	J	Z	j	z	è	Ü	¬	║	╩	┌	Ω	·
B			+	;	K	[	k	{	ï	¢	½	╗	╦	█	δ	√
C			,	<	L	\	l	|	î	£	¼	╝	╠	▄	∞	ⁿ
D			-	=	M	]	m	}	ì	¥	¡	╜	═	▌	φ	²
E			.	>	N	^	n	~	Ä	₧	«	╛	╬	▐	ε	■
F			/	?	O	_	o		Å	ƒ	»	┐	╧	▀	∩	

GERMAN (German)

L/H	0	1	2	3	4	5	6	7	8	9	A	B	C	D	E	F
0				0	§	P	`	p	Ç	É	á	░	└	╨	α	≡
1			!	1	A	Q	a	q	ü	æ	í	▒	┴	╤	ß	±
2			"	2	B	R	b	r	é	Æ	ó	▓	┬	╥	Γ	≥
3	♥		#	3	C	S	c	s	â	ô	ú	│	├	╙	π	≤
4	♦		$	4	D	T	d	t	ä	ö	ñ	┤	─	╘	Σ	⌠
5	♣	§	%	5	E	U	e	u	à	ò	Ñ	╡	┼	╒	σ	⌡
6	♠		&	6	F	V	f	v	å	û	ª	╢	╞	╓	µ	÷
7			'	7	G	W	g	w	ç	ù	º	╖	╟	╫	τ	≈
8			(	8	H	X	h	x	ê	ÿ	¿	╕	╚	╪	Φ	°
9			)	9	I	Y	i	y	ë	Ö	⌐	╣	╔	┘	Θ	•
A			*	:	J	Z	j	z	è	Ü	¬	║	╩	┌	Ω	·
B			+	;	K	Ä	k	ä	ï	¢	½	╗	╦	█	δ	√
C			,	<	L	Ö	l	ö	î	£	¼	╝	╠	▄	∞	ⁿ
D			-	=	M	Ü	m	ü	ì	¥	¡	╜	═	▌	φ	²
E			.	>	N	^	n	ß	Ä	₧	«	╛	╬	▐	ε	■
F			/	?	O	_	o		Å	ƒ	»	┐	╧	▀	∩	

SWEDISH (Swedish)

L/H	0	1	2	3	4	5	6	7	8	9	A	B	C	D	E	F
0				0	É	P	é	p	Ç	É	á	░	└	╨	α	≡
1			!	1	A	Q	a	q	ü	æ	í	▒	┴	╤	ß	±
2			"	2	B	R	b	r	é	Æ	ó	▓	┬	╥	Γ	≥
3	♥		#	3	C	S	c	s	â	ô	ú	│	├	╙	π	≤
4	♦		¤	4	D	T	d	t	ä	ö	ñ	┤	─	╘	Σ	⌠
5	♣	§	%	5	E	U	e	u	à	ò	Ñ	╡	┼	╒	σ	⌡
6	♠		&	6	F	V	f	v	å	û	ª	╢	╞	╓	µ	÷
7			'	7	G	W	g	w	ç	ù	º	╖	╟	╫	τ	≈
8			(	8	H	X	h	x	ê	ÿ	¿	╕	╚	╪	Φ	°
9			)	9	I	Y	i	y	ë	Ö	⌐	╣	╔	┘	Θ	•
A			*	:	J	Z	j	z	è	Ü	¬	║	╩	┌	Ω	·
B			+	;	K	Ä	k	ä	ï	¢	½	╗	╦	█	δ	√
C			,	<	L	Ö	l	ö	î	£	¼	╝	╠	▄	∞	ⁿ
D			-	=	M	Å	m	å	ì	¥	¡	╜	═	▌	φ	²
E			.	>	N	Ü	n	ü	Ä	₧	«	╛	╬	▐	ε	■
F			/	?	O	_	o		Å	ƒ	»	┐	╧	▀	∩	

ISO8859/ECMA94 (ISO 8859-1/ECMA94)

L/H	0	1	2	3	4	5	6	7	8	9	A	B	C	D	E	F
0				0	@	P	`	p				°	Á	Ð	à	ð
1			!	1	A	Q	a	q			¡	±	Â	Ñ	á	ñ
2			"	2	B	R	b	r			¢	²	Ã	Ò	â	ò
3	♥		#	3	C	S	c	s			£	³	Ä	Ó	ã	ó
4	♦		$	4	D	T	d	t			¤	´	Å	Ô	ä	ô
5	♠	§	%	5	E	U	e	u			¥	µ	Æ	Õ	å	õ
6	♣		&	6	F	V	f	v			¦	¶	Ç	Ö	æ	ö
7			'	7	G	W	g	w			§	·	È	×	ç	÷
8			(	8	H	X	h	x			¨	¸	É	Ø	è	ø
9			)	9	I	Y	i	y			©	¹	Ê	Ù	é	ù
A			*	:	J	Z	j	z			ª	º	Ë	Ú	ê	ú
B			+	;	K	[	k	{			«	»	Ì	Û	ë	û
C			,	<	L	\	l	|			¬	¼	Í	Ü	ì	ü
D			-	=	M	]	m	}			-	½	Î	Ý	í	ý
E			.	>	N	^	n	~			®	¾	Ï	Þ	î	þ
F			/	?	O	_	o				¯	¿	Ð	ß	ï	ÿ

PAGE850 (Code Page 850(Multilingual))

L/H	0	1	2	3	4	5	6	7	8	9	A	B	C	D	E	F
0				0	@	P	`	p	Ç	É	á	▒	└	ð	Ó	-
1			!	1	A	Q	a	q	ü	æ	í	▓	┴	Ð	ß	±
2			"	2	B	R	b	r	é	Æ	ó	│	┬	Ê	Ô	‗
3	♥		#	3	C	S	c	s	â	ô	ú	┤	├	Ë	Ò	¾
4	♦		$	4	D	T	d	t	ä	ö	ñ	╡	─	È	Õ	¶
5	♠	§	%	5	E	U	e	u	à	ò	Ñ	╢	┼	ı	Ö	§
6	♣		&	6	F	V	f	v	å	û	ª	╖	╞	Í	µ	÷
7			'	7	G	W	g	w	ç	ù	º	╕	╟	Î	þ	¸
8			(	8	H	X	h	x	ê	ÿ	¿	╣	╚	Ï	Þ	°
9			)	9	I	Y	i	y	ë	Ö	®	║	╔	┘	Ú	¨
A			*	:	J	Z	j	z	è	Ü	¬	╗	╩	┌	Û	·
B			+	;	K	[	k	{	ï	ø	½	╝	╦	█	Ù	¹
C			,	<	L	\	l	|	î	£	¼	╜	╠	▄	ý	³
D			-	=	M	]	m	}	ì	Ø	¡	╛	═	¦	Ý	²
E			.	>	N	^	n	~	Ä	×	«	¥	╬	Ì	¯	■
F			/	?	O	_	o		Å	ƒ	»	┐	╧	▀	´	

PAGE852/PG852-T (Code Page 852)

L/H	0	1	2	3	4	5	6	7	8	9	A	B	C	D	E	F
0				0	@	P	`	p	Ç	É	á	▒	└	đ	Ó	-
1			!	1	A	Q	a	q	ü	Ł	í	▓	┴	Đ	ß	˝
2			"	2	B	R	b	r	é	ł	ó	│	┬	Ď	Ô	˛
3	♥		#	3	C	S	c	s	â	Ö	ú	┤	├	Ë	Ń	ˇ
4	♦		$	4	D	T	d	t	ä	Ö	Ą	╡	─	ď	ń	˘
5	♠	§	%	5	E	U	e	u	ů	Ľ	ą	Á	┼	Ň	ň	§
6	♣		&	6	F	V	f	v	ć	ľ	Ž	Â	╞	Í	ä	÷
7			'	7	G	W	g	w	ç	ś	ž	Ě	╟	Î	Ă	¸
8			(	8	H	X	h	x	ł	ś	Ę	Ş	╚	ě	ă	°
9			)	9	I	Y	i	y	ë	Ö	ę	╣	╔	┘	Ť	¨
A			*	:	J	Z	j	z	ő	Ü	¬	╗	╩	┌	ť	·
B			+	;	K	[	k	{	ő	ť	ź	╝	╦	█	Ľ	˝
C			,	<	L	\	l	|	î	Ť	č	╜	╠	▄	ľ	Ř
D			-	=	M	]	m	}	ź	Ł	ş	ź	═	¦	Ź	ř
E			.	>	N	^	n	~	×	×	«	ż	╬	Ó	ť	■
F			/	?	O	_	o		č	č	»	˙	╧	▀	´	

PAGE855 (Code Page 855)

L/H	0	1	2	3	4	5	6	7	8	9	A	B	C	D	E	F
0				0	@	P	`	p	ђ	Ъ	а	▒	└	л	Я	≡
1			!	1	A	Q	a	q	Ђ	Ъ	А	▒	┴	Л	р	ы
2			"	2	B	R	b	r	ѓ	ъ	б	╫	┬	Н	Р	Ы
3	♥		#	3	C	S	c	s	Ѓ	Б	Б	├	├	М	с	З
4	♦		$	4	D	T	d	t	є	ц	ц	┤	─	Н	С	з
5	♠	§	%	5	E	U	e	u	Є	Ц	Ц	╡	┼	Й	т	ш
6	♣		&	6	F	V	f	v	є	к	д	╢	╞	о	Т	Ш
7			'	7	G	W	g	w	Є	К	Д	╖	╟	П	у	э
8			(	8	H	X	h	x	ѕ	ѓ	е	╕	╚	й	Ф	Э
9			)	9	I	Y	i	y	Ѕ	Ѓ	Е	╣	╔	┘	п	щ
A			*	:	J	Z	j	z	і	ф	ф	║	╩	┌	У	Щ
B			+	;	K	[	k	{	І	Ц	Ф	╗	╦	╖	ж	ч
C			,	<	L	\	l	|	ї	ю	г	╝	╠	▄	Ж	Ч
D			-	=	M	]	m	}	Ї	Ю	Г	╜	═	▌	в	ч
E			.	>	N	^	n	~	ј	ъ	«	Я	╬	Ю	ь	§
F			/	?	O	_	o		Ј	Ъ	»	┐	╧	▐	Ь	■

PAGE860 (Code Page 860(Portugal))

L/H	0	1	2	3	4	5	6	7	8	9	A	B	C	D	E	F
0				0	@	P	`	p	Ç	É	á	░	└	╨	α	≡
1			!	1	A	Q	a	q	ü	Ã	í	▒	┴	╤	ß	±
2			"	2	B	R	b	r	é	ã	ó	▓	┬	╥	Γ	≥
3	♥		#	3	C	S	c	s	â	õ	ú	│	├	╙	π	≤
4	♦		$	4	D	T	d	t	ä	ô	ñ	┤	─	╘	Σ	⌠
5	♣	§	%	5	E	U	e	u	à	ò	Ñ	╡	┼	╒	σ	⌡
6	♠		&	6	F	V	f	v	Á	ú	ª	╢	╞	╓	µ	÷
7			'	7	G	W	g	w	ç	ù	º	╖	╟	╫	τ	≈
8			(	8	H	X	h	x	ê	ì	¿	╕	╚	╪	Φ	°
9			)	9	I	Y	i	y	Ê	Õ	⌐	╣	╔	┘	Θ	∙
A			*	:	J	Z	j	z	è	Ü	¬	║	╩	┌	Ω	·
B			+	;	K	[	k	{	ï	¢	½	╗	╦	█	δ	√
C			,	<	L	\	l	|	î	£	¼	╝	╠	▄	∞	ⁿ
D			-	=	M	]	m	}	ì	¥	¡	╜	═	▌	φ	²
E			.	>	N	^	n	~	Ä	₧	«	╛	╬	▐	ε	■
F			/	?	O	_	o		Å	ƒ	»	┐	╧	▀	∩	

PAGE863 (Code Page 863 (Canada-French))

L/H	0	1	2	3	4	5	6	7	8	9	A	B	C	D	E	F
0				0	@	P	`	p	Ç	É	¦	░	└	╨	α	≡
1			!	1	A	Q	a	q	ü	È	´	▒	┴	╤	ß	±
2			"	2	B	R	b	r	é	Ê	ó	▓	┬	╥	Γ	≥
3	♥		#	3	C	S	c	s	â	ô	ú	│	├	╙	π	≤
4	♦		$	4	D	T	d	t	Â	Ë	¨	┤	─	╘	Σ	⌠
5	♣	§	%	5	E	U	e	u	à	ï	¸	╡	┼	╒	σ	⌡
6	♠		&	6	F	V	f	v	¶	û	³	╢	╞	╓	µ	÷
7			'	7	G	W	g	w	ç	ù	_	╖	╟	╫	τ	≈
8			(	8	H	X	h	x	ê	¤	⌐	╕	╚	╪	Φ	°
9			)	9	I	Y	i	y	Ë	Ô	¬	╣	╔	┘	Θ	∙
A			*	:	J	Z	j	z	è	Ü	¾	║	╩	┌	Ω	·
B			+	;	K	[	k	{	ï	¢	¶	╗	╦	█	δ	√
C			,	<	L	\	l	|	î	£	§	╝	╠	▄	∞	ⁿ
D			-	=	M	]	m	}	_	Ù	¨	╜	═	▌	φ	²
E			.	>	N	^	n	~	Â	û	«	╛	╬	▐	ε	■
F			/	?	O	_	o		§	ƒ	»	┐	╧	▀	∩	

PAGE865 (Code Page 865(Nordic))

L/H	0	1	2	3	4	5	6	7	8	9	A	B	C	D	E	F
0				0	@	P	`	p	Ç	É	á	░	└	╨	α	≡
1			!	1	A	Q	a	q	ü	æ	í	▒	┴	╤	ß	±
2			"	2	B	R	b	r	é	Æ	ó	▓	┬	╥	Γ	≥
3	♥		#	3	C	S	c	s	â	ô	ú	│	├	╙	π	≤
4	♦		$	4	D	T	d	t	ä	ò	ñ	┤	─	╘	Σ	⌠
5	♣	§	%	5	E	U	e	u	à	ò	Ñ	╡	┼	╒	σ	⌡
6	♠		&	6	F	V	f	v	å	û	ª	╢	╞	╓	µ	÷
7			'	7	G	W	g	w	ç	ù	º	╖	╟	╫	τ	≈
8			(	8	H	X	h	x	ê	ÿ	¿	╕	╚	╪	Φ	°
9			)	9	I	Y	i	y	ë	Ö	⌐	╣	╔	┘	Θ	∙
A			*	:	J	Z	j	z	è	Ü	¬	║	╩	┌	Ω	·
B			+	;	K	[	k	{	ï	ø	½	╗	╦	█	δ	√
C			,	<	L	\	l	|	î	£	¼	╝	╠	▄	∞	ⁿ
D			-	=	M	]	m	}	ì	Ø	¡	╜	═	▌	φ	²
E			.	>	N	^	n	~	Ä	₧	«	╛	╬	▐	ε	■
F			/	?	O	_	o		Å	ƒ	»	┐	╧	▀	∩	

PAGE866 (Code Page 866(Cyrillic))

L/H	0	1	2	3	4	5	6	7	8	9	A	B	C	D	E	F
0				0	@	P	`	p	А	Р	а	∙	└	╨	р	Ё
1			!	1	A	Q	a	q	Б	С	б	∙	┴	╤	с	ё
2			"	2	B	R	b	r	В	Т	в	▒	┬	╥	т	Є
3	♥		#	3	C	S	c	s	Г	У	г	│	├	╙	у	є
4	♦		$	4	D	T	d	t	Д	Ф	д	┤	─	╘	ф	Ї
5	♣	§	%	5	E	U	e	u	Е	Х	е	╡	┼	╒	х	ї
6	♠		&	6	F	V	f	v	Ж	Ц	ж	╢	╞	╓	ц	Ў
7			'	7	G	W	g	w	З	Ч	з	╖	╟	╫	ч	ў
8			(	8	H	X	h	x	И	Ш	и	╕	╚	╪	ш	°
9			)	9	I	Y	i	y	Й	Щ	й	╣	╔	┘	щ	∙
A			*	:	J	Z	j	z	К	Ъ	к	║	╩	┌	ъ	·
B			+	;	K	[	k	{	Л	Ы	л	╗	╦	█	ы	√
C			,	<	L	\	l	|	М	Ь	м	╝	╠	▄	ь	№
D			-	=	M	]	m	}	Н	Э	н	╜	═	▌	э	¤
E			.	>	N	^	n	~	О	Ю	о	╛	╬	▐	ю	■
F			/	?	O	_	o		П	Я	п	┐	╧	▀	я	

HUNGARY/HUNG-T (Hungarian)

L/H	0	1	2	3	4	5	6	7	8	9	A	B	C	D	E	F
0				0	@	P	`	p	Ç	É	á	▒	└	╨	α	≡
1			!	1	A	Q	a	q	ü	æ	í	▒	┴	╤	ß	±
2			"	2	B	R	b	r	é	Æ	ó	▓	┬	╥	Γ	≥
3	♥		#	3	C	S	c	s	â	ő	ú	│	├	╙	π	≤
4	♦		$	4	D	T	d	t	ä	ö	ñ	┤	─	╘	Σ	⌠
5	♣	§	%	5	E	U	e	u	à	ó	Ñ	╡	┼	╒	σ	⌡
6	♠		&	6	F	V	f	v	å	Ő	ª	╢	╞	╓	µ	÷
7			'	7	G	W	g	w	ç	ő	º	╖	╟	╫	τ	≈
8			(	8	H	X	h	x	ê	Ű	¿	╕	╚	╪	Φ	°
9			)	9	I	Y	i	y	ë	ű	⌐	╣	╔	┘	Θ	∙
A			*	:	J	Z	j	z	è	Ü	¬	║	╩	┌	Ω	·
B			+	;	K	[	k	{	ï	¢	½	╗	╦	█	δ	√
C			,	<	L	\	l	|	î	£	¼	╝	╠	▄	∞	ⁿ
D			-	=	M	]	m	}	ì	¥	¡	╜	═	▌	φ	²
E			.	>	N	^	n	~	Ä	₧	«	╛	╬	▐	ε	■
F			/	?	O	_	o		Á	ƒ	»	┐	╧	▀	∩	

SLOV/SLOV-T (Slovenian)

L/H	0	1	2	3	4	5	6	7	8	9	A	B	C	D	E	F
0				0	@	P	`	p	Ç	É	á	▒	└	╨	α	≡
1			!	1	A	Q	a	q	ü	æ	í	▒	┴	╤	ß	±
2			"	2	B	R	b	r	é	Æ	ó	▒	┬	╥	Γ	≥
3	♥		#	3	C	S	c	s	â	ô	ú	│	├	╙	π	≤
4	♦		$	4	D	T	d	t	ä	ö	ñ	┤	─	╘	Σ	⌠
5	♣	§	%	5	E	U	e	u	à	ò	Ñ	╡	┼	╒	σ	⌡
6	♠		&	6	F	V	f	v	å	û	ª	╢	╞	╓	µ	÷
7			'	7	G	W	g	w	ç	ù	º	╖	╟	╫	τ	≈
8			(	8	H	X	h	x	ê	ÿ	¿	╕	╚	╪	Φ	°
9			)	9	I	Y	i	y	ë	Ö	⌐	╣	╔	┘	Θ	∙
A			*	:	J	Z	j	z	è	Ü	¬	║	╩	┌	Ω	·
B			+	;	K	[	k	{	ï	¢	½	╗	╦	█	δ	√
C			,	<	L	\	l	|	î	£	¼	╝	╠	▄	∞	ⁿ
D			-	=	M	]	m	}	ì	¥	¡	╜	═	▌	φ	²
E			.	>	N	^	n	~	Ä	ß	«	╛	╬	▐	ε	■
F			/	?	O	_	o		Å	ƒ	»	┐	╧	▀	∩	

POLISH/POLSH-T (Polish)

L/H	0	1	2	3	4	5	6	7	8	9	A	B	C	D	E	F
0				0	@	P	`	p	Ç	Ę	ą	▒	└	đ	α	˜
1			!	1	A	Q	a	q	ü	ę	ą	▒	┴	Đ	ß	˝
2			"	2	B	R	b	r	é	ł	ó	▓	┬	Ď	Ó	˛
3	♥		#	3	C	S	c	s	â	ô	ń	│	├	Ě	π	ˇ
4	♦		$	4	D	T	d	t	ä	ö	ń	┤	─	ď	Σ	˘
5	♣	§	%	5	E	U	e	u	ů	Ć	Ń	╡	┼	Ň	ń	§
6	♠		&	6	F	V	f	v	ą	Ł	ą	╢	╞	ť	Ś	÷
7			'	7	G	W	g	w	ç	ů	ź	╖	╟	╫	ś	˙
8			(	8	H	X	h	x	ê	ś	ć	╕	╚	╪	Ř	°
9			)	9	I	Y	i	y	ë	ö	⌐	╣	╔	┘	Ů	∙
A			*	:	J	Z	j	z	ó	ń		║	╩	┌	ú	·
B			+	;	K	[	k	{	ł	Ł	ź	╗	╦	█	Ť	˝
C			,	<	L	\	l	|	ł	Ł	Č	╝	╠	▄	ř	ˇ
D			-	=	M	]	m	}	ć	¥	ę	╜	═	▌	ý	Ř
E			.	>	N	^	n	~	Ą	ś	«	╛	╬	▐	Ţ	■
F			/	?	O	_	o		Ą	ć	»	┐	╧	▀	˙	

MAZOWIA/MAZOW-T (Mazowian)

L/H	0	1	2	3	4	5	6	7	8	9	A	B	C	D	E	F
0				0	@	P	`	p	Ç	Ę	ą	▒	└	╨	α	≡
1			!	1	A	Q	a	q	ü	ę	ą	▒	┴	╤	ß	±
2			"	2	B	R	b	r	è	ł	ó	▒	┬	╥	Γ	≥
3	♥		#	3	C	S	c	s	ä	ô	ó	│	├	╙	π	≤
4	♦		$	4	D	T	d	t	ä	ö	ń	┤	─	╘	Σ	⌠
5	♣	§	%	5	E	U	e	u	à	ć	Ń	╡	┼	╒	σ	⌡
6	♠		&	6	F	V	f	v	ą	Ó	ż	╢	╞	╓	µ	÷
7			'	7	G	W	g	w	ç	ù	ż	╖	╟	╫	τ	≈
8			(	8	H	X	h	x	ê	ś	Ś	╕	╚	╪	Φ	°
9			)	9	I	Y	i	y	ë	ö	⌐	╣	╔	┘	Θ	∙
A			*	:	J	Z	j	z	è	Ü	¬	║	╩	┌	Ω	·
B			+	;	K	[	k	{	ł	¢	½	╗	╦	█	δ	√
C			,	<	L	\	l	|	ł	Ł	¼	╝	╠	▄	∞	ⁿ
D			-	=	M	]	m	}	ć	¥	¡	╜	═	▌	φ	²
E			.	>	N	^	n	~	Ä	ß	«	╛	╬	▐	ε	■
F			/	?	O	_	o		A	ƒ	»	┐	╧	▀	∩	

LATIN2/LATN2-T (Latin2)

L/H	0	1	2	3	4	5	6	7	8	9	A	B	C	D	E	F
0				0	@	P	`	p	Ç	É	á	▒	└	╨	ó	≡
1			!	1	A	Q	a	q	ü	ł	í	▒	┴	╥	ß	±
2			"	2	B	R	b	r	é	Ł	ó	▓	┬	╤	Ô	≥
3	♥		#	3	C	S	c	s	â	ô	ú	│	├	╘	Ò	≤
4	♦		$	4	D	T	d	t	ä	ö	ñ	┤	─	╒	ď	⌠
5	♣	§	%	5	E	U	e	u	ů	Ö	Ñ	╡	┼	╓	Ň	⌡
6	♠		&	6	F	V	f	v	ć	Ľ	Ž	╢	├	╫	ť	÷
7			'	7	G	W	g	w	č	ú	ž	╖	┤	╪	Ť	≈
8			(	8	H	X	h	x	ł	ý	¿	╕	┐	┘	ň	°
9			)	9	I	Y	i	y	ś	Ó	⌐	╣	│	┌	Ó	∙
A			*	:	J	Z	j	z	ě	Ů	¬	║	╘	╙	ť	·
B			+	;	K	[	k	{	ť	Ť	½	╗	╒	╖	ś	√
C			,	<	L	\	l	|	ť	Č	¼	╝	╓	╕	ý	ř
D			-	=	M	]	m	}	ť	ť	¡	╜	─	╛	Ý	ř
E			.	>	N	^	n	~	Ł	Ř	«	╛	┼	╘	Ł	■
F			/	?	O	_	o		Ł	č	»	┐	╧	╙	Ň	

KAMENIC/KAMEN-T (Kamenicky)

L/H	0	1	2	3	4	5	6	7	8	9	A	B	C	D	E	F
0				0	@	P	`	p	Č	É	á	▒	└	╨	α	≡
1			!	1	A	Q	a	q	ü	ž	í	▒	┴	╥	ß	±
2			"	2	B	R	b	r	é	ž	ó	▓	┬	╤	Γ	≥
3	♥		#	3	C	S	c	s	ď	ô	ú	│	├	╘	π	≤
4	♦		$	4	D	T	d	t	ä	ö	ň	┤	─	╒	Σ	⌠
5	♣	§	%	5	E	U	e	u	Ď	Ň	ř	╡	┼	╓	σ	⌡
6	♠		&	6	F	V	f	v	Ť	ů	Ď	╢	├	╫	µ	÷
7			'	7	G	W	g	w	č	ť	ť	╖	┤	╪	τ	≈
8			(	8	H	X	h	x	ě	ý	Ě	╕	┐	┘	Φ	°
9			)	9	I	Y	i	y	ř	Ř	⌐	╣	│	┌	Θ	∙
A			*	:	J	Z	j	z	Ľ	ů	ř	║	╘	╙	Ω	·
B			+	;	K	[	k	{	ť	ě	Ř	╗	╒	╖	δ	√
C			,	<	L	\	l	|	ť	Ť	½	╝	╓	╕	∞	ⁿ
D			-	=	M	]	m	}	ť	ť	Š	╜	─	╛	ø	²
E			.	>	N	^	n	~	Ł	Ř	«	╛	┼	╘	Є	■
F			/	?	O	_	o		Ł	Ť	»	┐	╧	╙	Π	

TURKY/TURKY-T (Turkish)

L/H	0	1	2	3	4	5	6	7	8	9	A	B	C	D	E	F
0				0	@	P	`	p	Ç	É	á	▒	└	╨	α	≡
1			!	1	A	Q	a	q	ü	æ	í	▒	┴	╥	ß	±
2			"	2	B	R	b	r	é	Æ	ó	▓	┬	╤	Γ	≥
3	♥		#	3	C	S	c	s	â	ô	ú	│	├	╘	π	≤
4	♦		$	4	D	T	d	t	ä	ö	ñ	┤	─	╒	Σ	⌠
5	♣	§	%	5	E	U	e	u	à	ò	Ñ	╡	┼	╓	σ	⌡
6	♠		&	6	F	V	f	v	å	û	ğ	╢	├	╫	µ	÷
7			'	7	G	W	g	w	ç	ù	ğ	╖	┤	╪	τ	≈
8			(	8	H	X	h	x	ê	¿	¿	╕	┐	┘	Φ	°
9			)	9	I	Y	i	y	ë	ö	⌐	╣	│	┌	Θ	∙
A			*	:	J	Z	j	z	è	Ü	¬	║	╘	╙	Ω	·
B			+	;	K	[	k	{	ï	¢	½	╗	╒	╖	δ	√
C			,	<	L	\	l	|	î	£	¼	╝	╓	╕	∞	ⁿ
D			-	=	M	]	m	}	ì	¥	¡	╜	─	╛	ø	²
E			.	>	N	^	n	~	Ł	Ř	«	╛	┼	╘	Є	■
F			/	?	O	_	o		Ł	ğ	»	┐	╧	╙	Π	

CYRILIC (Cyrillic)

L/H	0	1	2	3	4	5	6	7	8	9	A	B	C	D	E	F
0				0	@	P	`	p				А	Р	а	р	►
1			!	1	A	Q	a	q			Ё	Б	С	б	с	◄
2			"	2	B	R	b	r			Ъ	В	Т	в	т	↕
3	♥		#	3	C	S	c	s			ґ	Г	У	г	у	‼
4	♦		$	4	D	T	d	t			є	Д	Ф	д	ф	є
5	♣	§	%	5	E	U	e	u			Ѕ	Е	Х	е	х	¶
6	♠		&	6	F	V	f	v			і	Ж	Ц	ж	ц	↨
7			'	7	G	W	g	w			ї	З	Ч	з	ч	↑
8			(	8	H	X	h	x			Ј	И	Ш	и	ш	↓
9			)	9	I	Y	i	y			Ѝ	Й	Щ	й	щ	↔
A			*	:	J	Z	j	z			Ѣ	К	Ъ	к	ъ	←
B			+	;	K	[	k	{			Ґ	Л	Ы	л	ы	↑
C			,	<	L	\	l	|			Ѓ	М	Ь	м	ь	↓
D			-	=	M	]	m	}				Н	Э	н	э	↔
E			.	>	N	^	n	~			Ї	О	Ю	о	ю	↔
F			/	?	O	_	o				Ц	П	Я	п	я	↔

IBM437 (IBM 437)

L/H	0	1	2	3	4	5	6	7	8	9	A	B	C	D	E	F
0				0	@	P	`	p	A	P	ι	▒	└	╨	ω	≡
1			!	1	A	Q	a	q	B	Σ	κ	▓	┴	╤	ά	±
2			"	2	B	R	b	r	Γ	Τ	λ	═	┬	╥	έ	≥
3	♥		#	3	C	S	c	s	Δ	Υ	μ	╞	├	╙	ή	≤
4	♦		$	4	D	T	d	t	Ε	Φ	ν	╡	─	╘	ϊ	⌠
5	♣	§	%	5	E	U	e	u	Ζ	Χ	ξ	╢	┼	╒	ΐ	⌡
6	♠		&	6	F	V	f	v	Η	Ψ	ο	╖	╞	╓	ό	÷
7			'	7	G	W	g	w	Θ	Ω	π	╕	╡	╫	ύ	≈
8			(	8	H	X	h	x	Ι	α	ρ	╣	╢	╪	ώ	°
9			)	9	I	Y	i	y	Κ	β	σ	║	╖	┘	Ά	∙
A			*	:	J	Z	j	z	Λ	γ	ς	╗	╕	┌	Έ	·
B			+	;	K	[	k	{	Μ	δ	τ	╝	╜	█	Ή	√
C			,	<	L	\	l	|	Ν	ε	υ	╜	╛	▄	Ί	ⁿ
D			-	=	M	]	m	}	Ξ	ζ	φ	╛	╘	▌	ΰ	²
E			.	>	N	^	n	~	Ο	η	χ	┐	╒	▐	Ό	■
F			/	?	O	_	o		Π	θ	ψ	└	╓	▀	Ύ	

IBM851 (IBM 851)

L/H	0	1	2	3	4	5	6	7	8	9	A	B	C	D	E	F
0				0	@	P	`	p	Ç	Ι	ΐ	▒	└	Τ	ζ	-
1			!	1	A	Q	a	q	ü		ι	▓	┴	Υ	η	±
2			"	2	B	R	b	r	é	Ο	ό	═	┬	Φ	θ	υ
3	♥		#	3	C	S	c	s	Δ	Ο	Ύ	╞	├	Χ	ι	ψ
4	♦		$	4	D	T	d	t	ä	ô	Α	╡	─	Ψ	κ	χ
5	♣	§	%	5	E	U	e	u	à	Υ	Β	Κ	┼	Ω	λ	ς
6	♠		&	6	F	V	f	v	Α	ΰ	Γ	Λ	Π	α	μ	ψ
7			'	7	G	W	g	w	ç	ù	Δ	Μ	Ρ	β	ν	;
8			(	8	H	X	h	x	ê	Ω	Ε	Ν	╕	γ	ξ	¨
9			)	9	I	Y	i	y	ë	Ö	Ζ	╢	╣	┘	ο	¹
A			*	:	J	Z	j	z	è	Ü	Η	╖	╗	┌	π	ω
B			+	;	K	[	k	{	Ï	¢	½	╗	╝	▄	ρ	Ϋ
C			,	<	L	\	l	|	î	£	¼	╜	╜	▌	σ	ά
D			-	=	M	]	m	}	Ì	¥	¡	╛	╛	▐	ς	ΰ
E			.	>	N	^	n	~	Ä	Ρ	«	┐	╘	▀	τ	■
F			/	?	O	_	o		Ã	ƒ	»	└	╒	═	Π	

ELOT928 (ELOT 928)

L/H	0	1	2	3	4	5	6	7	8	9	A	B	C	D	E	F
0				0	@	P	`	p			'	ΐ	Π	ό	σ	
1			!	1	A	Q	a	q			'	±	Α	Ρ	α	ρ
2			"	2	B	R	b	r			'	²	Β		β	ς
3	♥		#	3	C	S	c	s			£	³	Γ	Σ	γ	σ
4	♦		$	4	D	T	d	t				'	Δ	Τ	δ	τ
5	♣	§	%	5	E	U	e	u				'	Ε	Υ	ε	υ
6	♠		&	6	F	V	f	v			¦	Α	Ζ	Φ	ζ	φ
7			'	7	G	W	g	w			§	·	Η	Χ	η	χ
8			(	8	H	X	h	x			¨	Ε	Θ	Ψ	θ	ψ
9			)	9	I	Y	i	y			©	Η	Ι	Ω	ι	ω
A			*	:	J	Z	j	z				Ι	Κ	Υ	κ	ΐ
B			+	;	K	[	k	{			«	»	Λ	Ϋ	λ	ΰ
C			,	<	L	\	l	|			¬	Ο	Μ	ά	μ	ό
D			-	=	M	]	m	}				½	Ν	έ	ν	ύ
E			.	>	N	^	n	~				Υ	Ξ	ή	ξ	ώ
F			/	?	O	_	o				–	Ω	Ο	ί	ο	

PG-DHN (Code Page DHN)

L/H	0	1	2	3	4	5	6	7	8	9	A	B	C	D	E	F
0				0	@	P	`	p	Ą	ź	á	▒	└	╨	α	Ξ
1			!	1	A	Q	a	q	ć	ż	í	▓	┴	╤	ß	±
2			"	2	B	R	b	r	ę	Ź	ó	═	┬	╥	Γ	≥
3	♥		#	3	C	S	c	s	Ł	Ś	ú	╞	├	╙	π	≤
4	♦		$	4	D	T	d	t	ń	ö	ñ	╡	─	╘	Σ	⌠
5	♣	§	%	5	E	U	e	u	ó	ò	Ñ	╢	┼	╒	σ	⌡
6	♠		&	6	F	V	f	v	ś	ô	ª	╖	╞	╓	µ	÷
7			'	7	G	W	g	w	ź	ą	º	╕	╡	╫	τ	≈
8			(	8	H	X	h	x	ż	ý	¿	╣	╢	╪	Φ	°
9			)	9	I	Y	i	y	ą	ö	⌐	╗	╖	┘	Θ	∙
A			*	:	J	Z	j	z	ć	ü	¬	╝	╕	┌	Ω	·
B			+	;	K	[	k	{	ę	¢	½	╜	╗	▄	δ	√
C			,	<	L	\	l	|	ł	£	¼	╛	╝	▌	∞	ⁿ
D			-	=	M	]	m	}	ń	¥	¡	┘	╜	▐	φ	²
E			.	>	N	^	n	~	ó	ß	«	┌	╛	▀	ε	■
F			/	?	O	_	o		ś	ƒ	»	└	╘	═	∩	

LATIN-P (Latin Polish)

L/H	0	1	2	3	4	5	6	7	8	9	A	B	C	D	E	F
0				0	@	P	`	p	Ç	É	á	▒	└	╨	O	≡
1			!	1	A	Q	a	q	ü	æ	í	▓	┴	╤	ß	±
2			"	2	B	R	b	r	é	Æ	ó	╫	┬	╥	Γ	≥
3	♥		#	3	C	S	c	s	â	ô	ú	│	├	╙	Ñ	≤
4	♦		$	4	D	T	d	t	ä	ö	Ą	┤	─	╘	ñ	⌠
5	♣	§	%	5	E	U	e	u	à	ò	ą	╡	┼	╒	ª	⌡
6	♠		&	6	F	V	f	v	ć	û	ª	╢	╞	╓	µ	÷
7			'	7	G	W	g	w	ç	ś	º	╖	╟	╫	˚	≈
8			(	8	H	X	h	x	ł	ś	Ę	╕	╠	╪	°	°
9			)	9	I	Y	i	y	ë	Ö	ę	╣	╡	┘	⁰	•
A			*	:	J	Z	j	z	è	Ü	¬	║	╢	┌	Ω	·
B			+	;	K	[	k	{	ï	¢	ź	╗	╖	╔	δ	√
C			,	<	L	\	l	|	î	£	¼	╝	╕	╚	∞	ⁿ
D			-	=	M	]	m	}	ź	Ł	¡	╜	╛	╒	ø	²
E			.	>	N	^	n	~	Ä	Ś	«	╛	╘	╔	ε	■
F			/	?	O	_	o		Ć	ƒ	»	┐	╘	╚	∩	

ISO-LTN (ISO Latin)

L/H	0	1	2	3	4	5	6	7	8	9	A	B	C	D	E	F
0				0	@	P	`	p				°	Ŕ	Ð	ŕ	đ
1			!	1	A	Q	a	q			Ą	ą	Á	Ń	á	ń
2			"	2	B	R	b	r			˘	˛	Â	Ň	â	ň
3	♥		#	3	C	S	c	s			Ł	ł	Ă	Ó	ă	ó
4	♦		$	4	D	T	d	t			¤	´	Ä	Ô	ä	ô
5	♣	§	%	5	E	U	e	u			Ľ	ĺ	Ĺ	Õ	í	õ
6	♠		&	6	F	V	f	v			ś	ś	Ć	Ö	ć	ö
7			'	7	G	W	g	w			§	ˇ	Ç	×	ç	÷
8			(	8	H	X	h	x			¨	¸	Č	Ř	č	ř
9			)	9	I	Y	i	y			Š	ş	É	Ů	é	ů
A			*	:	J	Z	j	z			Ş	ş	Ę	Ú	ę	ú
B			+	;	K	[	k	{			Ť	ť	Ě	Ũ	ě	ũ
C			,	<	L	\	l	|			Ź	ź	Ë	Ü	ë	ü
D			-	=	M	]	m	}			-	˝	Í	Ý	í	ý
E			.	>	N	^	n	~			Ž	ž	Î	Ţ	î	ţ
F			/	?	O	_	o				Ż	ż	Ď	ß	ď	˙

LITHUA1 (Lithuanian 1)

L/H	0	1	2	3	4	5	6	7	8	9	A	B	C	D	E	F
0				0	@	P	`	p	А	Р	а	▒	└	ą	р	Ξ
1			!	1	A	Q	a	q	Б	С	б	▓	┴	č	с	±
2			"	2	B	R	b	r	В	Т	в	╫	┬	ę	т	≥
3	♥		#	3	C	S	c	s	Г	У	г	│	├	ė	у	≤
4	♦		$	4	D	T	d	t	Д	Ф	д	┤	─	┤	ф	⌠
5	♣	§	%	5	E	U	e	u	Е	Х	е	╡	┼	š	х	⌡
6	♠		&	6	F	V	f	v	Ж	Ц	ж	╢	╞	ū	ц	÷
7			'	7	G	W	g	w	З	Ч	з	╖	╟	ų	ч	≈
8			(	8	H	X	h	x	И	Ш	и	╕	╠	ž	ш	°
9			)	9	I	Y	i	y	Й	Щ	й	╣	╪	┘	щ	•
A			*	:	J	Z	j	z	К	Ъ	к	╗	╫	┌	ъ	·
B			+	;	K	[	k	{	Л	Ы	л	╝	╬	▓	ы	√
C			,	<	L	\	l	|	М	Ь	м	╜	╫	╗	ь	ⁿ
D			-	=	M	]	m	}	Н	Э	н	╛	╪	╕	э	²
E			.	>	N	^	n	~	О	Ю	о	┐	╬	╝	ю	■
F			/	?	O	_	o		П	Я	п	┌	╘	╚	я	

LITHUA2 (Lithuanian 2)

L/H	0	1	2	3	4	5	6	7	8	9	A	B	C	D	E	F
0				0	@	P	`	p	А	Р	а	▒	└	ą	р	Ę
1			!	1	A	Q	a	q	Б	С	б	▓	┴	č	с	ę
2			"	2	B	R	b	r	В	Т	в	╫	┬	ę	т	Ė
3	♥		#	3	C	S	c	s	Г	У	г	│	├	ė	у	ė
4	♦		$	4	D	T	d	t	Д	Ф	д	┤	─	┤	ф	Ī
5	♣	§	%	5	E	U	e	u	Е	Х	е	╡	┼	┌	х	ī
6	♠		&	6	F	V	f	v	Ж	Ц	ж	╢	╞	╒	ц	Š
7			'	7	G	W	g	w	З	Ч	з	╖	╟	╫	ч	š
8			(	8	H	X	h	x	И	Ш	и	╕	╠	╪	ш	Ų
9			)	9	I	Y	i	y	Й	Щ	й	╣	╪	┘	щ	ц
A			*	:	J	Z	j	z	К	Ъ	к	╗	╫	┌	ъ	Ū
B			+	;	K	[	k	{	Л	Ы	л	╝	╬	▓	ы	ū
C			,	<	L	\	l	|	М	Ь	м	╜	╫	╗	ь	Ž
D			-	=	M	]	m	}	Н	Э	н	╛	╪	╕	э	ž
E			.	>	N	^	n	~	О	Ю	о	┐	╬	╝	ю	■
F			/	?	O	_	o		П	Я	п	┌	╘	╚	я	

MIK

L/H	0	1	2	3	4	5	6	7	8	9	A	B	C	D	E	F
0				0	@	P	`	p	А	Р	▒	р	└		α	≡
1			!	1	A	Q	a	q	Б	С	▓	с	┴		ß	±
2			"	2	B	R	b	r	В	Т	▀	т	┬		Γ	≥
3	♥		#	3	C	S	c	s	Г	У	г	у	├		π	≤
4	♦		$	4	D	T	d	t	Д	Ф	д	ф	─		Σ	⌠
5	♣	§	%	5	E	U	e	u	Е	Х	е	х	┼		σ	⌡
6	♠		&	6	F	V	f	v	Ж	Ц	ж	ц	┤		µ	÷
7			'	7	G	W	g	w	З	Ч	з	ч	│		τ	≈
8			(	8	H	X	h	x	И	Ш	и	ш	└		Φ	°
9			)	9	I	Y	i	y	Й	Щ	й	щ	┘		Θ	•
A			*	:	J	Z	j	z	К	Ъ	к	ъ	┌		Ω	·
B			+	;	K	[	k	{	Л	Ы	л	ы	┐		δ	√
C			,	<	L	\	l	|	М	Ь	м	ь	╞		∞	ⁿ
D			-	=	M	]	m	}	Н	Э	н	э	═		φ	²
E			.	>	N	^	n	~	О	Ю	о	ю	╪		ε	■
F			/	?	O	_	o		П	Я	п	я	╗		∩	

MACEDON (Macedonian)

L/H	0	1	2	3	4	5	6	7	8	9	A	B	C	D	E	F
0				0	@	P	`	p	А	Ѣ	Ć	▒	└	Л	а	ѣ
1			!	1	A	Q	a	q	Б	О	ć	▓	┴	╥	б	о
2			"	2	B	R	b	r	В	П	Đ	▄	┬	╤	п	п
3	♥		#	3	C	S	c	s	Г	Р	đ	▌	├	╦	г	р
4	♦		$	4	D	T	d	t	Д	С	Ž	─	┤	╠	д	с
5	♣	§	%	5	E	U	e	u	Ѣ	Т	ž	▐	┼	╧	ѣ	т
6	♠		&	6	F	V	f	v	Е	Ѣ	Ǵ	▀	╞	╨	ć	ѣ
7			'	7	G	W	g	w	Ж	У	ǵ	▌	╡	╫	ж	у
8			(	8	H	X	h	x	З	Ф	У	│	╢	╪	з	ф
9			)	9	I	Y	i	y	И	Х	Ć	┤	╖	┘	и	х
A			*	:	J	Z	j	z	J	Ц	đ	╟	╕	┌	j	ц
B			+	;	K	[	k	{	К	Ч	Ѣ	╢	╣	╓	к	ч
C			,	<	L	\	l	|	Л	Ш	ž	╖	╗	╫	л	ш
D			-	=	M	]	m	}	Ѣ	Щ	°	╕	╝	╪	ѣ	щ
E			.	>	N	^	n	~	Ǵ	Ć	«	┘	╜	┘	м	■
F			/	?	O	_	o		Н	Ѣ	»	┐	╛	┘	н	

ABG

L/H	0	1	2	3	4	5	6	7	8	9	A	B	C	D	E	F
0				0	@	P	`	Π	Α	Ρ	ι		└	┴	ω	≡
1			!	1	A	Q	a	p	Β	Σ	κ		┴	╤	ά	±
2			"	2	B	R	b	r	Γ	Τ	λ	▒	┬	╥	έ	≥
3	♥		#	3	C	S	c	s	Δ	Υ	μ	│	├	╠	ή	≤
4	♦		$	4	D	T	d	t	Ε	Φ	ν	┤	─	═	ί	⌠
5	♣	§	%	5	E	U	e	u	Ζ	Χ	ξ	╡	┼	╪	ϊ	⌡
6	♠		&	6	F	V	f	v	Η	Ψ	ο	╢	╞	╫	ό	÷
7			'	7	G	W	g	w	Θ	Ω	π	╖	╟	╬	ύ	≈
8			(	8	H	X	h	x	Ι	α	ρ	╕	╢	╧	ϋ	°
9			)	9	I	Y	i	y	Κ	β	σ	╣	╡	╩	ΰ	•
A			*	:	J	Z	j	z	Λ	γ	ς	╗	╖	╔	Ω	·
B			+	;	K	[	k	{	Μ	δ	τ	╝	╕	╦	ώ	√
C			,	<	L	\	l	|	Ν	ε	υ	╜	╢	╠	ⁿ	
D			-	=	M	]	m	}	Ξ	ζ	φ	╛	╣	═	²	■
E			.	>	N	^	n	~	Ο	η	χ	┐	╗	╬	ΐ	
F			/	?	O	_	o		Π	Ο	ψ	┌	╝	╧	ΰ	

ABY

L/H	0	1	2	3	4	5	6	7	8	9	A	B	C	D	E	F
0				0	@	P	`	Π	Α	Ρ	ι		└	┴	ω	¯
1			!	1	A	Q	a	q	Β	Σ	κ		┴	╤	ά	±
2			"	2	B	R	b	r	Γ	Τ	λ	▒	┬	╥	έ	≥
3	♥		#	3	C	S	c	s	Δ	Υ	μ	│	├	╠	ή	≤
4	♦		$	4	D	T	d	t	Ε	Φ	ν	┤	─	═	ί	⌠
5	♣	§	%	5	E	U	e	u	Ζ	Χ	ξ	╡	┼	╪	ϊ	⌡
6	♠		&	6	F	V	f	v	Η	Ψ	ο	╢	╞	╫	ό	÷
7			'	7	G	W	g	w	Θ	Ω	π	╖	╟	╬	ύ	≈
8			(	8	H	X	h	x	Ι	α	ρ	╕	╢	╧	ϋ	°
9			)	9	I	Y	i	y	Κ	β	σ	╣	╡	╩	ΰ	•
A			*	:	J	Z	j	z	Λ	γ	ς	╗	╖	╔	Ω	·
B			+	;	K	[	k	{	Μ	δ	τ	╝	╕	╦	ώ	√
C			,	<	L	\	l	|	Ν	ε	υ	╜	╢	╠	ⁿ	
D			-	=	M	]	m	}	Ξ	ζ	φ	╛	╣	═	²	■
E			.	>	N	^	n	~	Ο	η	χ	┐	╗	╬	ΐ	
F			/	?	O	_	o		Π	Θ	ψ	┌	╝	╧	ΰ	

PG-MAC

L/H	0	1	2	3	4	5	6	7	8	9	A	B	C	D	E	F
0				0	Ж	П	ж	п	А	Р	а	▒	└	┴	р	Р
1			!	1	А	Л	а	л	Б	С	б	▓	┴	┬	с	Б
2			"	2	Б	Р	б	р	В	Т	в	╫	┬	┌	т	Є
3	♥		#	3	Ц	С	ц	с	Г	У	г	│	├	│	у	є
4	♦		$	4	Д	Т	д	т	Д	Ф	д	┤	┤	┤	ф	Y
5	♣	§	%	5	Е	У	е	у	Е	Х	е	┼	┼	┌	х	Y
6	♠		&	6	Ф	В	ф	в	Ж	Ц	ж	╢	╢	│	ц	ў
7			'	7	Г	Ь	г	ь	З	Ч	з	╖	╖	┘	ч	Ў
8			(	8	Х	Ш	х	ш	И	Ш	и	╕	╕	┐	ш	°
9			)	9	И	Щ	и	щ	Й	Щ	й	╗	╗	┌	щ	•
A			*	:	Й	Э	й	э	К	Ъ	к	╘	╘	╒	ъ	·
B			+	;	К	Ы	к	ы	Л	Ы	л	╙	╙	╓	Ы	√
C			,	<	Л	Ї	л	ї	М	Ь	м	╚	╚	╫	Ь	ⁿ
D			-	=	М	Ґ	м	ґ	Н	Э	н	╛	╛	╪	Э	¤
E			.	>	Н	Ч	н	ч	О	Ю	о	╜	╜	┘	Ю	■
F			/	?	О	_	о		П	Я	п	┐	┐	│	Я	

ELOT927

L/H	0	1	2	3	4	5	6	7	8	9	A	B	C	D	E	F
0				0	@	P	`	Π	Α	Ρ	ΐ		└	┴	ω	Ξ
1			!	1	A	Q	a	Ρ	Β	Σ	κ		┴	┬	ά	±
2			"	2	B	R	b		Γ	Τ	λ	▒	┬	┌	έ	≥
3	♥		#	3	C	S	c	Σ	Δ	Υ	μ	│	├	│	ή	≤
4	♦		$	4	D	T	d	Τ	Ε	Φ	ν	┤	┤	┤	ί	⌠
5	♣	§	%	5	E	U	e	Υ	Ζ	Χ	ξ	┼	┼	┌	ύ	⌡
6	♠		&	6	F	V	f	Φ	Η	Ψ	ο	╢	╢	│	ό	÷
7			'	7	G	W	g	Χ	Θ	Ω	π	╖	╖	┘	ύ	≈
8			(	8	H	X	h	Ψ	Ι	α	ρ	╕	╕	┐	ώ	°
9			)	9	I	Y	i	Ω	Κ	β	σ	╗	╗	┌	ώ	•
A			*	:	J	Z	j	Ϊ	Λ	γ	ς	╘	╘	╒	Ω	·
B			+	;	K	[	k	Ά	Μ	δ	τ	╙	╙	╓	ΐ	√
C			,	<	L	\	l	Έ	Ν	ε	υ	╚	╚	╫	ⁿ	²
D			-	=	M	]	m	Ή	Ξ	ζ	φ	╛	╛	╪	ΰ	²
E			.	>	N	^	n	Ί	Ο	η	χ	╜	╜	┘	ΰ	■
F			/	?	O	_	o		Π	Θ	ψ	┐	┐	│	ΐ	
															Ά	

DECGR

L/H	0	1	2	3	4	5	6	7	8	9	A	B	C	D	E	F
0				0	@	P	`	p	A	P		'	¿		Ó	
1			!	1	A	Q	a	q	B	Σ	ι	±	A	Π	α	π
2			"	2	B	R	b	r	Γ	T	¡	²	B	P	β	ρ
3	♥		#	3	C	S	c	s	Δ	Y	£	³	Γ	Σ	γ	σ
4	♦		$	4	D	T	d	t	E	Φ			Δ	T	δ	τ
5	♣	§	%	5	E	U	e	u	Z	X	¥	µ	E	Y	ε	υ
6	♠		&	6	F	V	f	v	H	Ψ			Z	Φ	ζ	φ
7			'	7	G	W	g	w	Θ	Ω	§		H	X	η	χ
8			(	8	H	X	h	x	I	α	¤		Θ	Ψ	θ	ψ
9			)	9	I	Y	i	y	K	β	©		I	Ω	ι	ω
A			*	:	J	Z	j	z	Λ	γ	ª		K	ά	κ	ς
B			+	;	K	[	k	{	M	δ	«	»	Λ	έ	λ	ύ
C			,	<	L	\	l	|	N	ε		¼	M	ή	μ	ώ
D			-	=	M	]	m	}	Ξ	ζ		½	N	ί	ν	'
E			.	>	N	^	n	~	O	η			Ξ		ξ	
F			/	?	O	_	o		Π	θ		¿	O	ό	ο	

GREEK 11

L/H	0	1	2	3	4	5	6	7	8	9	A	B	C	D	E	F
0				0	@	P	▒	Π								
1			!	1	A	Q	A	┬								
2			"	2	B	R	B	P								
3	♥		#	3	C	S	Ψ	Σ								
4	♦		$	4	D	T	Δ	T								
5	♣	§	%	5	E	U	E	Θ								
6	♠		&	6	F	V	Φ	Ω								
7			'	7	G	W	Γ	┴								
8			(	8	H	X	H	X								
9			)	9	I	Y	I	Y								
A			*	:	J	Z	Ξ	Z								
B			+	;	K	┌	K	┤								
C			,	<	L	└	Λ	├								
D			-	=	M	┐	M	┼								
E			.	>	N	┘	N	┤								
F			/	?	O	_	O									

PAGE862

L/H	0	1	2	3	4	5	6	7	8	9	A	B	C	D	E	F
0				0	@	P	`	p	א	ד	á	▒	└	╨	α	≡
1			!	1	A	Q	a	q	ב	ה	í	▓	┴	╤	ß	±
2			"	2	B	R	b	r	ג	ו	ó	│	┬	╥	Γ	≥
3	♥		#	3	C	S	c	s	ד	ז	ú	┤	├	╙	π	≤
4	♦		$	4	D	T	d	t	ה	ח	ñ	╡	─	╘	Σ	⌠
5	♣	§	%	5	E	U	e	u	ו	ט	Ñ	╢	┼	╒	σ	⌡
6	♠		&	6	F	V	f	v	ז	י	ª	╖	╞	╓	µ	÷
7			'	7	G	W	g	w	ח	כ	º	╕	╟	╫	τ	≈
8			(	8	H	X	h	x	ט	ך	¿	╣	╠	╪	Φ	°
9			)	9	I	Y	i	y	י	מ	⌐	║	╩	┘	Θ	•
A			*	:	J	Z	j	z	ך	נ	¬	╗	╦	┌	Ω	·
B			+	;	K	[	k	{	כ	ס	½	╝	╬	█	δ	√
C			,	<	L	\	l	|	ל	ע	¼	╜	╧	▄	∞	ⁿ
D			-	=	M	]	m	}	מ	פ	¡	╛	╨	▌	ø	²
E			.	>	N	^	n	~	נ	צ	«	╘	╤	▐	ε	■
F			/	?	O	_	o		ן	ק	»	┐	╥	▀	∩	

HBR OLD

L/H	0	1	2	3	4	5	6	7	8	9	A	B	C	D	E	F
0				0	@	P	`	p	Ç	É	á	▒	└	╨	α	≡
1			!	1	A	Q	a	q	ü	æ	í	▓	┴	╤	ß	±
2			"	2	B	R	b	r	é	Æ	ó	│	┬	╥	Γ	≥
3	♥		#	3	C	S	c	s	â	ô	ú	┤	├	╙	π	≤
4	♦		$	4	D	T	d	t	ä	ö	ñ	╡	─	╘	Σ	⌠
5	♣	§	%	5	E	U	e	u	à	ò	Ñ	╢	┼	╒	σ	⌡
6	♠		&	6	F	V	f	v	å	û	ª	╖	╞	╓	µ	÷
7			'	7	G	W	g	w	ç	ù	º	╕	╟	╫	τ	≈
8			(	8	H	X	h	x	ê	ÿ	¿	╣	╠	╪	Φ	°
9			)	9	I	Y	i	y	ë	Ö	⌐	║	╩	┘	Θ	•
A			*	:	J	Z	j	z	è	Ü	¬	╗	╦	┌	Ω	·
B			+	;	K	[	k	{	ï	¢	½	╝	╬	█	δ	√
C			,	<	L	\	l	|	î	£	¼	╜	╧	▄	∞	ⁿ
D			-	=	M	]	m	}	ì	¥	¡	╛	╨	▌	ø	²
E			.	>	N	^	n	~	Ä	₧	«	╘	╤	▐	ε	■
F			/	?	O	_	o		Å	ƒ	»	┐	╥	▀	∩	

HBR DEC

L/H	0	1	2	3	4	5	6	7	8	9	A	B	C	D	E	F
0				0	@	P	`	p	Ç	É	á	▒	└	╨	א	ד
1			!	1	A	Q	a	q	ü	æ	í	▓	┴	╤	ב	ה
2			"	2	B	R	b	r	é	Æ	ó	│	┬	╥	ג	ו
3	♥		#	3	C	S	c	s	â	ô	ú	┤	├	╙	ד	ז
4	♦		$	4	D	T	d	t	ä	ö	ñ	╡	─	╘	ה	ח
5	♣	§	%	5	E	U	e	u	à	ò	Ñ	╢	┼	╒	ו	ט
6	♠		&	6	F	V	f	v	å	û	ª	╖	╞	╓	ז	י
7			'	7	G	W	g	w	ç	ù	º	╕	╟	╫	ח	כ
8			(	8	H	X	h	x	ê	ÿ	¿	╣	╠	╪	ט	ך
9			)	9	I	Y	i	y	ë	Ö	⌐	║	╩	┘	י	מ
A			*	:	J	Z	j	z	è	Ü	¬	╗	╦	┌	ך	נ
B			+	;	K	[	k	{	ï	¢	½	╝	╬	█	כ	ס
C			,	<	L	\	l	|	î	£	¼	╜	╧	▄	ל	ע
D			-	=	M	]	m	}	ì	¥	¡	╛	╨	▌	מ	פ
E			.	>	N	^	n	~	Ä	₧	«	╘	╤	▐	נ	צ
F			/	?	O	_	o		Å	ƒ	»	┐	╥	▀	ן	ק

ISO-TUK

L/H	0	1	2	3	4	5	6	7	8	9	A	B	C	D	E	F
0				0	@	P	`	p				°	Ä	Ğ	ä	ğ
1			!	1	A	Q	a	q			¡	±	Å	Ñ	å	ñ
2			"	2	B	R	b	r			¢	²	Ą	Ò	ą	ò
3	♥		#	3	C	S	c	s			£	³	Ą	Ó	ą	ó
4	♦		$	4	D	T	d	t			¤	´	Ą	Ô	Ą	ô
5	♣	§	%	5	E	U	e	u			¥	µ	Ą	Ò	ą	ò
6	♠		&	6	F	V	f	v			¦	¶	Æ	Ö	æ	ö
7			'	7	G	W	g	w			§	·	Ç	×	ç	÷
8			(	8	H	X	h	x			¨	¸	Ę	Ø	ę	ø
9			)	9	I	Y	i	y			©	¹	E	Ù	é	ù
A			*	:	J	Z	j	z			ª	º	Ę	Ú	ę	ú
B			+	;	K	[	k	{			«	»	Ę	Ó	ę	ó
C			,	<	L	\	l	|			¬	¼	Ī	Ù	ī	ù
D			-	=	M	]	m	}			-	½	Ī	I	ī	ı
E			.	>	N	^	n	~			®	¾	Ī	Ş	ī	ş
F			/	?	O	_	o					¿	Ī	SS	ī	ÿ

NATIONAL CHARACTER SETS (DPL24C PLUS AND IBM XL24E EMULATION)

The following character sets differ from those of Code Page 437 (USA), available in the DPL24C PLUS command set and the IBM Proprinter XL24E emulation.

FRENCH (French)

L/H	0	1	2	3	4	5	6	7	8	9	A	B	C	D	E	F
0				0	à	P	`	p	Ç	É	á	░	└	╨	α	≡
1			!	1	A	Q	a	q	ü	æ	í	▒	┴	╤	β	±
2			"	2	B	R	b	r	é	Æ	ó	▓	┬	╥	Γ	≥
3	♥		£	3	C	S	c	s	â	ô	ú	│	├	╙	π	≤
4	♦		$	4	D	T	d	t	ä	ö	ñ	┤	─	╘	Σ	⌠
5	♣	§	%	5	E	U	e	u	à	ò	Ñ	╡	┼	╒	σ	⌡
6	♠		&	6	F	V	f	v	â	û	ª	╢	╞	╓	µ	÷
7			'	7	G	W	g	w	ç	ù	º	╖	╟	╫	τ	≈
8			(	8	H	X	h	x	ê	ÿ	¿	╕	╚	╪	Φ	°
9			)	9	I	Y	i	y	ë	Ö	⌐	╣	╔	┘	Θ	•
A			*	:	J	Z	j	z	è	Ü	¬	║	╩	┌	Ω	·
B			+	;	K	°	k	é	ï	¢	½	╗	╦	█	δ	√
C			,	<	L	ç	l	ù	î	£	¼	╝	╠	▄	∞	ⁿ
D			-	=	M	§	m	è	ì	¥	¡	╜	═	▌	Ø	²
E			.	>	N	^	n	¨	Ä	R	«	╛	╬	▐	ε	■
F			/	?	O	_	o		Å	f	»	┐	╧	▀	∩	

ITALIAN (Italian)

L/H	0	1	2	3	4	5	6	7	8	9	A	B	C	D	E	F
0				0	§	P	ù	p	Ç	É	á	░	└	╨	α	≡
1			!	1	A	Q	a	q	ü	æ	í	▒	┴	╤	β	±
2			"	2	B	R	b	r	é	Æ	ó	▓	┬	╥	Γ	≥
3	♥		£	3	C	S	c	s	â	ô	ú	│	├	╙	π	≤
4	♦		$	4	D	T	d	t	ä	ö	ñ	┤	─	╘	Σ	⌠
5	♣	§	%	5	E	U	e	u	à	ò	Ñ	╡	┼	╒	σ	⌡
6	♠		&	6	F	V	f	v	ä	ù	ª	╢	╞	╓	µ	÷
7			'	7	G	W	g	w	ç	ù	º	╖	╟	╫	τ	≈
8			(	8	H	X	h	x	è	ÿ	¿	╕	╚	╪	Φ	°
9			)	9	I	Y	i	y	è	Ö	⌐	╣	╔	┘	Θ	•
A			*	:	J	Z	j	z	è	Ü	¬	║	╩	┌	Ω	·
B			+	;	K	°	k	à	ì	¢	½	╗	╦	█	δ	√
C			,	<	L	ç	l	ò	ì	£	¼	╝	╠	▄	∞	ⁿ
D			-	=	M	é	m	è	ì	¥	¡	╜	═	▌	Ø	²
E			.	>	N	^	n	ì	Ä	R	«	╛	╬	▐	ε	■
F			/	?	O	_	o		Å	f	»	┐	╧	▀	∩	

SPANISH (Spanish)

L/H	0	1	2	3	4	5	6	7	8	9	A	B	C	D	E	F
0				0	§	P	`	p	Ç	É	á	░	└	╨	α	≡
1			!	1	A	Q	a	q	ü	æ	í	▒	┴	╤	β	±
2			"	2	B	R	b	r	é	Æ	ó	▓	┬	╥	Γ	≥
3	♥		£	3	C	S	c	s	â	ô	ú	│	├	╙	π	≤
4	♦		$	4	D	T	d	t	ä	ö	ñ	┤	─	╘	Σ	⌠
5	♣	§	%	5	E	U	e	u	à	ò	Ñ	╡	┼	╒	σ	⌡
6	♠		&	6	F	V	f	v	ä	ù	ª	╢	╞	╓	µ	÷
7			'	7	G	W	g	w	ç	ù	º	╖	╟	╫	τ	≈
8			(	8	H	X	h	x	è	ÿ	¿	╕	╚	╪	Φ	°
9			)	9	I	Y	i	y	è	Ö	⌐	╣	╔	┘	Θ	•
A			*	:	J	Z	j	z	è	Ü	¬	║	╩	┌	Ω	·
B			+	;	K	I	k	°	ì	¢	½	╗	╦	█	δ	√
C			,	<	L	Ñ	l	ñ	ì	£	¼	╝	╠	▄	∞	ⁿ
D			-	=	M	¿	m	ç	ì	¥	¡	╜	═	▌	Ø	²
E			.	>	N	^	n	¨	Ä	R	«	╛	╬	▐	ε	■
F			/	?	O	_	o		Å	f	»	┐	╧	▀	∩	

FINNISH (Finnish)

L/H	0	1	2	3	4	5	6	7	8	9	A	B	C	D	E	F
0				0	É	P	é	p	Ç	É	á	░	└	╨	α	≡
1			!	1	A	Q	a	q	ü	æ	í	▒	┴	╤	β	±
2			"	2	B	R	b	r	é	Æ	ó	▓	┬	╥	Γ	≥
3	♥		#	3	C	S	c	s	â	ô	ú	│	├	╙	π	≤
4	♦		¤	4	D	T	d	t	ä	ö	ñ	┤	─	╘	Σ	⌠
5	♣	§	%	5	E	U	e	u	à	ò	Ñ	╡	┼	╒	σ	⌡
6	♠		&	6	F	V	f	v	ä	ù	ª	╢	╞	╓	µ	÷
7			'	7	G	W	g	w	ç	ù	º	╖	╟	╫	τ	≈
8			(	8	H	X	h	x	è	ÿ	¿	╕	╚	╪	Φ	°
9			)	9	I	Y	i	y	è	Ö	⌐	╣	╔	┘	Θ	•
A			*	:	J	Z	j	z	è	Ü	¬	║	╩	┌	Ω	·
B			+	;	K	Ä	k	ä	ì	¢	½	╗	╦	█	δ	√
C			,	<	L	Ö	l	ö	ì	£	¼	╝	╠	▄	∞	ⁿ
D			-	=	M	Å	m	å	ì	¥	¡	╜	═	▌	Ø	²
E			.	>	N	Ü	n	ü	Ä	R	«	╛	╬	▐	ε	■
F			/	?	O	_	o		Å	f	»	┐	╧	▀	∩	

DANISH1/NORWEGN (Danish1/Norwegian)

L/H	0	1	2	3	4	5	6	7	8	9	A	B	C	D	E	F
0				0	@	P	`	p	Ç	É	á	▒	└	╨	α	≡
1			!	1	A	Q	a	q	ü	æ	í	▓	┴	╤	ß	±
2			"	2	B	R	b	r	é	Æ	ó	╫	┬	╥	Γ	≥
3	♥		#	3	C	S	c	s	â	ô	ú	┤	├	╙	π	≤
4	♦		$	4	D	T	d	t	ä	ö	ñ	╢	─	╘	Σ	⌠
5	♣	§	%	5	E	U	e	u	à	ò	Ñ	╡	┼	╒	σ	⌡
6	♠		&	6	F	V	f	v	å	û	ª	╕	╞	╓	µ	÷
7			'	7	G	W	g	w	ç	ù	º	╣	╟	╫	τ	≈
8			(	8	H	X	h	x	ê	ÿ	¿	║	╚	╪	Φ	°
9			)	9	I	Y	i	y	ë	Ö	⌐	╗	╔	┘	Θ	•
A			*	:	J	Z	j	z	è	Ü	¬	╝	╩	┌	Ω	·
B			+	;	K	Æ	k	æ	ï	¢	½	╜	╦	█	δ	√
C			,	<	L	Ø	l	ø	î	£	¼	╛	╠	▄	∞	ⁿ
D			-	=	M	Å	m	å	ì	¥	¡	╘	═	▌	φ	²
E			.	>	N	Ü	n	ü	Ä	₧	«	╒	╬	▐	ε	■
F			/	?	O	_	o		Å	ƒ	»	┐	╧	▀	∩	

DANISH2 (Danish2)

L/H	0	1	2	3	4	5	6	7	8	9	A	B	C	D	E	F
0				0	@	P	`	p	Ç	É	á	▒	└	╨	α	≡
1			!	1	A	Q	a	q	ü	æ	í	▓	┴	╤	ß	±
2			"	2	B	R	b	r	é	Æ	ó	╫	┬	╥	Γ	≥
3	♥		#	3	C	S	c	s	â	ô	ú	┤	├	╙	π	≤
4	♦		$	4	D	T	d	t	ä	ö	ñ	╢	─	╘	Σ	⌠
5	♣	§	%	5	E	U	e	u	à	ò	Ñ	╡	┼	╒	σ	⌡
6	♠		&	6	F	V	f	v	å	û	ª	╕	╞	╓	µ	÷
7			'	7	G	W	g	w	ç	ù	º	╣	╟	╫	τ	≈
8			(	8	H	X	h	x	ê	ÿ	¿	║	╚	╪	Φ	°
9			)	9	I	Y	i	y	ë	Ö	⌐	╗	╔	┘	Θ	•
A			*	:	J	Z	j	z	è	Ü	¬	╝	╩	┌	Ω	·
B			+	;	K	[	k	{	ï	¢	½	╜	╦	█	δ	√
C			,	<	L	\	l	|	î	£	¼	╛	╠	▄	∞	ⁿ
D			-	=	M	]	m	}	ì	¥	¡	╘	═	▌	φ	²
E			.	>	N	^	n	~	Ä	₧	«	╒	╬	▐	ε	■
F			/	?	O	_	o		Å	ƒ	»	┐	╧	▀	∩	

NATIONAL CHARACTER SETS (ESC/P2 EMULATION)

The following character sets differ from the graphics character sets available in the Epson ESC/P2 emulation.

DANISH1 (Danish1)

L/H	0	1	2	3	4	5	6	7	8	9	A	B	C	D	E	F
0				0	@	P	`	p	Ç	É	á	▒	└	╨	α	≡
1			!	1	A	Q	a	q	ü	æ	í	▓	┴	╤	ß	±
2			"	2	B	R	b	r	é	Æ	ó	╫	┬	╥	Γ	≥
3			#	3	C	S	c	s	â	ô	ú	┤	├	╙	π	≤
4			$	4	D	T	d	t	ä	ö	ñ	╢	─	╘	Σ	⌠
5		§	%	5	E	U	e	u	à	ò	Ñ	╡	┼	╒	σ	⌡
6			&	6	F	V	f	v	å	û	ª	╕	╞	╓	µ	÷
7			'	7	G	W	g	w	ç	ù	º	╣	╟	╫	τ	≈
8			(	8	H	X	h	x	ê	ÿ	¿	║	╚	╪	Φ	°
9			)	9	I	Y	i	y	ë	Ö	⌐	╗	╔	┘	Θ	•
A			*	:	J	Z	j	z	è	Ü	¬	╝	╩	┌	Ω	·
B			+	;	K	Æ	k	æ	ï	¢	½	╜	╦	█	δ	√
C			,	<	L	Ø	l	ø	î	£	¼	╛	╠	▄	∞	ⁿ
D			-	=	M	Å	m	å	ì	¥	¡	╘	═	▌	φ	²
E			.	>	N	^	n	~	Ä	₧	«	╒	╬	▐	ε	■
F			/	?	O	_	o		Å	ƒ	»	┐	╧	▀	∩	

SPANSH1 (Spanish1)

L/H	0	1	2	3	4	5	6	7	8	9	A	B	C	D	E	F
0				0	@	P	`	p	Ç	É	á	▒	└	╨	α	≡
1			!	1	A	Q	a	q	ü	æ	í	▓	┴	╤	ß	±
2			"	2	B	R	b	r	é	Æ	ó	╫	┬	╥	Γ	≥
3			Pt	3	C	S	c	s	â	ô	ú	┤	├	╙	π	≤
4			$	4	D	T	d	t	ä	ö	ñ	╢	─	╘	Σ	⌠
5		§	%	5	E	U	e	u	à	ò	Ñ	╡	┼	╒	σ	⌡
6			&	6	F	V	f	v	å	û	ª	╕	╞	╓	µ	÷
7			'	7	G	W	g	w	ç	ù	º	╣	╟	╫	τ	≈
8			(	8	H	X	h	x	ê	ÿ	¿	║	╚	╪	Φ	°
9			)	9	I	Y	i	y	ë	Ö	⌐	╗	╔	┘	Θ	•
A			*	:	J	Z	j	z	è	Ü	¬	╝	╩	┌	Ω	·
B			+	;	K	¡	k	¨	ï	¢	½	╜	╦	█	δ	√
C			,	<	L	Ñ	l	ñ	î	£	¼	╛	╠	▄	∞	ⁿ
D			-	=	M	¿	m	}	ì	¥	¡	╘	═	▌	φ	²
E			.	>	N	^	n	~	Ä	₧	«	╒	╬	▐	ε	■
F			/	?	O	_	o		Å	ƒ	»	┐	╧	▀	∩	

ITALIAN (Italian)

L/H	0	1	2	3	4	5	6	7	8	9	A	B	C	D	E	F
0				0	@	P	ù	p	ç	É	á	▒	└	╨	α	≡
1			!	1	A	Q	a	q	ü	æ	í	▓	┴	╥	ß	±
2			"	2	B	R	b	r	é	Æ	ó	╗	┬	╤	Γ	≥
3			#	3	C	S	c	s	â	ô	ú	╝	├	╘	π	≤
4			$	4	D	T	d	t	ä	ö	ñ	╜	─	╒	Σ	⌠
5		§	%	5	E	U	e	u	à	ò	Ñ	╛	┼	╓	σ	⌡
6			&	6	F	V	f	v	å	û	ª	┐	╞	╫	µ	÷
7			'	7	G	W	g	w	ç	ù	º	└	╟	╪	τ	≈
8			(	8	H	X	h	x	ê	ÿ	¿	┘	╚	┘	Φ	°
9			)	9	I	Y	i	y	ë	Ö	⌐	┌	╔	┌	Θ	•
A			*	:	J	Z	j	z	è	Ü	¬	▄	╩	╓	Ω	·
B			+	;	K	[	k	{	ï	¢	½	▌	╦	╫	δ	√
C			,	<	L	\	l	|	î	£	¼	═	╠	╪	∞	ⁿ
D			-	=	M	é	m	}	ì	¥	¡	╡	═	╪	φ	²
E			.	>	N	^	n	~	Ä	₧	«	╢	╬	╫	ε	■
F			/	?	O	_	o		A	ƒ	»	╖	╧	╪	∩	

SPANSH2 (Spanish2)

L/H	0	1	2	3	4	5	6	7	8	9	A	B	C	D	E	F
0				0	á	P	`	p	Ç	É	á	▒	└	╨	α	≡
1			!	1	A	Q	a	q	ü	æ	í	▒	┴	╥	ß	±
2			"	2	B	R	b	r	é	Æ	ó	▓	┬	╤	Γ	≥
3			#	3	C	S	c	s	â	ô	ú	│	├	╘	π	≤
4			$	4	D	T	d	t	ä	ö	ñ	┤	─	╒	Σ	⌠
5		§	%	5	E	U	e	u	à	ò	Ñ	╡	┼	╓	σ	⌡
6			&	6	F	V	f	v	å	û	ª	╢	╞	╫	µ	÷
7			'	7	G	W	g	w	ç	ù	º	╖	╟	╪	τ	≈
8			(	8	H	X	h	x	ê	ÿ	¿	╕	╚	┘	Φ	°
9			)	9	I	Y	i	y	ë	Ö	⌐	╣	╔	┌	Θ	•
A			*	:	J	Z	j	z	è	Ü	¬	║	╩	╓	Ω	·
B			+	;	K	[	k	{	ï	¢	½	╗	╦	╫	δ	√
C			,	<	L	\	l	|	î	£	¼	╝	╠	╪	∞	ⁿ
D			-	=	M	¡	m	}	ì	¥	¡	╜	═	╪	φ	²
E			.	>	N	é	n	~	Ä	R	«	╛	╬	╫	ε	■
F			/	?	O	_	o		A	ƒ	»	┐	╧	╪	∩	

JAPAN (Japanese)

L/H	0	1	2	3	4	5	6	7	8	9	A	B	C	D	E	F
0				0	@	P	~	p	Ç	É	á	▒	└	╨	α	≡
1			!	1	A	Q	a	q	ü	æ	í	▒	┴	╥	ß	±
2			"	2	B	R	b	r	é	Æ	ó	▓	┬	╤	Γ	≥
3			#	3	C	S	c	s	â	ô	ú	│	├	╘	π	≤
4			$	4	D	T	d	t	ä	ö	ñ	┤	─	╒	Σ	⌠
5		§	%	5	E	U	e	u	à	ò	Ñ	╡	┼	╓	σ	⌡
6			&	6	F	V	f	v	å	û	ª	╢	╞	╫	µ	÷
7			'	7	G	W	g	w	ç	ù	º	╖	╟	╪	τ	≈
8			(	8	H	X	h	x	ê	ÿ	¿	╕	╚	┘	Φ	°
9			)	9	I	Y	i	y	ë	Ö	⌐	╣	╔	┌	Θ	•
A			*	:	J	Z	j	z	è	Ü	¬	║	╩	╓	Ω	·
B			+	;	K	[	k	{	ï	¢	½	╗	╦	╫	δ	√
C			,	<	L	¥	l	|	î	£	¼	╝	╠	╪	∞	ⁿ
D			-	=	M	]	m	}	ì	¥	¡	╜	═	╪	φ	²
E			.	>	N	^	n	~	Ä	R	«	╛	╬	╫	ε	■
F			/	?	O	_	o		A	ƒ	»	┐	╧	╪	∩	

LATIN A (Latin American)

L/H	0	1	2	3	4	5	6	7	8	9	A	B	C	D	E	F
0				0	á	P	ú	p	Ç	É	á	▒	└	╨	α	≡
1			!	1	A	Q	a	q	ü	æ	í	▒	┴	╥	ß	±
2			"	2	B	R	b	r	é	Æ	ó	▓	┬	╤	Γ	≥
3			#	3	C	S	c	s	â	ô	ú	│	├	╘	π	≤
4			$	4	D	T	d	t	ä	ö	ñ	┤	─	╒	Σ	⌠
5		§	%	5	E	U	e	u	à	ò	Ñ	╡	┼	╓	σ	⌡
6			&	6	F	V	f	v	å	û	ª	╢	╞	╫	µ	÷
7			'	7	G	W	g	w	ç	ù	º	╖	╟	╪	τ	≈
8			(	8	H	X	h	x	ê	ÿ	¿	╕	╚	┘	Φ	°
9			)	9	I	Y	i	y	ë	Ö	⌐	╣	╔	┌	Θ	•
A			*	:	J	Z	j	z	è	Ü	¬	║	╩	╓	Ω	·
B			+	;	K	[	k	{	ï	¢	½	╗	╦	╫	δ	√
C			,	<	L	¥	l	|	î	£	¼	╝	╠	╪	∞	ⁿ
D			-	=	M	¿	m	}	ì	¥	¡	╜	═	╪	φ	²
E			.	>	N	é	n	~	Ä	R	«	╛	╬	╫	ε	■
F			/	?	O	_	o		A	ƒ	»	┐	╧	╪	∩	

NORWEGN (Norwegian)

L/H	0	1	2	3	4	5	6	7	8	9	A	B	C	D	E	F
0				0	É	P	é	p	Ç	É	á	▒	└	╨	α	≡
1			!	1	A	Q	a	q	ü	æ	í	▒	┴	╥	β	±
2			"	2	B	R	b	r	é	Æ	ó	▓	┬	╤	Γ	≥
3			#	3	C	S	c	s	â	ô	ú	│	├	╦	π	≤
4			¤	4	D	T	d	t	ä	ö	ñ	┤	─	╠	Σ	⌠
5		§	%	5	E	U	e	u	à	ò	Ñ	╡	┼	╒	σ	⌡
6			&	6	F	V	f	v	å	û	ª	╢	╞	╓	µ	÷
7			'	7	G	W	g	w	ç	ù	º	╖	╟	╫	τ	≈
8			(	8	H	X	h	x	ê	ÿ	¿	╕	╚	╪	Φ	°
9			)	9	I	Y	i	y	ë	Ö	⌐	╣	╔	┘	Θ	•
A			*	:	J	Z	j	z	è	Ü	¬	║	╩	┌	Ω	·
B			+	;	K	Æ	k	æ	ï	¢	½	╗	╦	█	δ	√
C			,	<	L	Ø	l	ø	î	£	¼	╝	╠	▄	∞	ⁿ
D			-	=	M	Å	m	å	ì	¥	¡	╜	═	▌	φ	²
E			.	>	N	Ü	n	ü	Ä	R	«	╛	╬	▐	ε	■
F			/	?	O	_	o		A	ƒ	»	┐	╧	▀	∩	

FRENCH (French)

L/H	0	1	2	3	4	5	6	7	8	9	A	B	C	D	E	F
0				0	à	P	`	p	ç	É	á	▒	└	╨	α	≡
1			!	1	A	Q	a	q	ü	æ	í	▒	┴	╥	β	±
2			"	2	B	R	b	r	é	Æ	ó	▓	┬	╤	Γ	≥
3			#	3	C	S	c	s	â	ô	ú	│	├	╦	π	≤
4			$	4	D	T	d	t	ä	ö	ñ	┤	─	╠	Σ	⌠
5		§	%	5	E	U	e	u	à	ò	Ñ	╡	┼	╒	σ	⌡
6			&	6	F	V	f	v	å	û	ª	╢	╞	╓	µ	÷
7			'	7	G	W	g	w	ç	ù	º	╖	╟	╫	τ	≈
8			(	8	H	X	h	x	ê	ÿ	¿	╕	╚	╪	Φ	°
9			)	9	I	Y	i	y	ë	Ö	⌐	╣	╔	┘	Θ	•
A			*	:	J	Z	j	z	è	Ü	¬	║	╩	┌	Ω	·
B			+	;	K	°	k	é	ï	¢	½	╗	╦	█	δ	√
C			,	<	L	ç	l	à	î	£	¼	╝	╠	▄	∞	ⁿ
D			-	=	M	§	m	è	ì	¥	¡	╜	═	▌	φ	²
E			.	>	N	^	n	"	Ä	B	«	╛	╬	▐	ε	■
F			/	?	O	_	o		A	ƒ	»	┐	╧	▀	∩	

DANISH2 (Danish2)

L/H	0	1	2	3	4	5	6	7	8	9	A	B	C	D	E	F
0				0	É	P	é	p	Ç	É	á	▒	└	╨	α	≡
1			!	1	A	Q	a	q	ü	æ	í	▒	┴	╥	β	±
2			"	2	B	R	b	r	é	Æ	ó	▓	┬	╤	Γ	≥
3			#	3	C	S	c	s	â	ô	ú	│	├	╦	π	≤
4			$	4	D	T	d	t	ä	ö	ñ	┤	─	╠	Σ	⌠
5		§	%	5	E	U	e	u	à	ò	Ñ	╡	┼	╒	σ	⌡
6			&	6	F	V	f	v	å	û	ª	╢	╞	╓	µ	÷
7			'	7	G	W	g	w	ç	ù	º	╖	╟	╫	τ	≈
8			(	8	H	X	h	x	ê	ÿ	¿	╕	╚	╪	Φ	°
9			)	9	I	Y	i	y	ë	Ö	⌐	╣	╔	┘	Θ	•
A			*	:	J	Z	j	z	è	Ü	¬	║	╩	┌	Ω	·
B			+	;	K	Æ	k	æ	ï	¢	½	╗	╦	█	δ	√
C			,	<	L	Ø	l	ø	î	£	¼	╝	╠	▄	∞	ⁿ
D			-	=	M	Å	m	å	ì	¥	¡	╜	═	▌	φ	²
E			.	>	N	Ü	n	ü	Ä	R	«	╛	╬	▐	ε	■
F			/	?	O	_	o		A	ƒ	»	┐	╧	▀	∩	

KOREA (Korea)

L/H	0	1	2	3	4	5	6	7	8	9	A	B	C	D	E	F
0				0	@	P	`	p	Ç	É	á	▒	└	╨	α	≡
1			!	1	A	Q	a	q	ü	æ	í	▒	┴	╥	β	±
2			"	2	B	R	b	r	é	Æ	ó	▓	┬	╤	Γ	≥
3			#	3	C	S	c	s	â	ô	ú	│	├	╦	π	≤
4			$	4	D	T	d	t	ä	ö	ñ	┤	─	╠	Σ	⌠
5		$	%	5	E	U	e	u	à	ò	Ñ	╡	┼	╒	σ	⌡
6			&	6	F	V	f	v	å	û	ª	╢	╞	╓	µ	÷
7			'	7	G	W	g	w	ç	ù	º	╖	╟	╫	τ	≈
8			(	8	H	X	h	x	ê	ÿ	¿	╕	╚	╪	Φ	°
9			)	9	I	Y	i	y	ë	Ö	⌐	╣	╔	┘	Θ	•
A			*	:	J	Z	j	z	è	Ü	¬	║	╩	┌	Ω	·
B			+	;	K	[	k	{	ï	¢	½	╗	╦	▄	δ	√
C			,	<	L	₩	l	|	î	£	¼	╝	╠	▌	∞	ⁿ
D			-	=	M	]	m	}	ì	¥	¡	╜	═	▐	φ	²
E			.	>	N	^	n	~	Ä	R	«	╛	╬	▀	ε	■
F			/	?	O	_	o		A	ƒ	»	┐	╧	▄	∩	

LEGAL (Legal)

L/H	0	1	2	3	4	5	6	7	8	9	A	B	C	D	E	F
0				0	Ş	P	`	p	Ç	£	á	▒	└	╨	α	≡
1			!	1	A	Q	a	q	ü	⅌	í	▓	┴	╤	β	±
2			"	2	B	R	b	r	é	Æ	ó	╗	┬	╥	Γ	≥
3			#	3	C	S	c	s	â	ô	ú	╝	├	╙	π	≤
4			$	4	D	T	d	t	ä	ö	ñ	┐	─	╘	Σ	⌠
5		§	%	5	E	U	e	u	à	ò	Ñ	═	┼	╒	σ	⌡
6			&	6	F	V	f	v	å	û	ª	╣	╞	╓	µ	÷
7			'	7	G	W	g	w	ç	ù	º	╠	╟	╫	τ	≈
8			(	8	H	X	h	x	ê	ÿ	¿	╖	╚	╪	Φ	°
9			)	9	I	Y	i	y	ë	Ö	⌐	╕	╔	┘	Θ	∙
A			*	:	J	Z	j	z	è	Ü	¬	╜	╩	┌	Ω	·
B			+	;	K	[	k	{	ï	¢	½	╛	╦	█	δ	√
C			,	<	L	\	l	|	î	£	¼	╓	╠	▄	∞	ⁿ
D			-	=	M	]	m	}	ì	¥	¡	╒	═	▌	φ	²
E			.	>	N	¶	n	~	Ä	₧	«	╕	╬	▐	ε	■
F			/	?	O	_	o		Å	ƒ	»	╖	╧	▀	∩	

NATIONAL CHARACTER SETS AND SUPPORTED RESIDENT FONTS (ALL EMULATIONS)

In all emulations, this printer supports 50 national character sets for characters and symbols specific to different languages. Some national character sets, however, do not have some characters and symbols and may not be usable, depending on resident fonts. The following tables show which of the resident fonts are supported for each national character set:

Resident font		Courier 10	Elite 12	Compress	Draft	Bold PS	Pica 10	Courier scalable**	Timeless **	Nimbus Sans **	Correspondence	H-draft***	OCR-B	OCR-A
National character set	Name in setup menu													
USA *	USA	√	√	√	√	√	√	√	√	√	√	√	√	√
United Kingdom	UK	√	√	√	√	√	√	√	√	√	√	√	√	
German	GERMAN	√	√	√	√	√	√	√	√	√	√	√	√	

(Continued on the next page)

* USA is the same as Code Page 437.

** These are scalable and provided with upright, italic, and bold as resident fonts.

*** H-draft stands for high-speed draft.

√: Supported

Resident font		Courier 10	Elite 12	Compress	Draft	Bold PS	Pica 10	Courier scalable**	Timeless **	Nimbus Sans **	Correspondence	H-draft***	OCR-B	OCR-A
National character set	Name in setup menu													
Swedish	SWEDISH	√	√	√	√	√	√	√	√	√	√	√	√	
ISO 8859-1	ISO8859	√	√	√	√	√	√	√	√	√	√	√	√	
ECMA94	ECMA94	√	√	√	√	√	√	√	√	√	√	√	√	
Code Page 437 *	PAGE437	√	√	√	√	√	√	√	√	√	√	√	√	√
Code Page 850	PAGE850	√	√	√	√	√	√	√	√	√	√	√	√	
Code Page 852	PAGE852	√	√	√	√	√	√	√	√	√	√	√		
Code two-pass	PAGE852-T	√	√	√	√	√	√	√	√	√	√	√		
Code Page 855	PAGE855	√	√	√	√			√	√	√				
Code Page 860	PAGE860	√	√	√	√	√	√	√	√	√	√	√	√	
Code Page 863	PAGE863	√	√	√	√	√	√	√	√	√	√	√	√	
Code Page 865	PAGE865	√	√	√	√	√	√	√	√	√	√	√	√	
Code Page 866	PAGE866	√	√	√	√			√	√	√				
Hungarian	HUNGARY	√	√	√	√	√	√	√	√	√	√	√		
Hungarian two-pass	HUNG-T	√	√	√	√	√	√	√	√	√	√	√		
Slovenian	SLOV	√	√	√	√	√	√	√	√	√	√	√	√	
Slovenian two-pass	SLOV-T	√	√	√	√	√	√	√	√	√	√	√		
Polish	POLISH	√	√	√	√	√	√	√	√	√	√	√		
Polish two-pass	POLSH-T	√	√	√	√	√	√	√	√	√	√	√		
Mazovian	MAZOWIA	√	√	√	√	√	√				√	√		
Mazovian two-pass	MAZOW-T	√	√	√	√	√	√				√	√		
Latin 2	LATIN2	√	√	√	√	√	√	√	√	√	√	√		
Latin 2 two-pass	LATIN2-T	√	√	√	√	√	√	√	√	√	√	√		

(Continued on the next page)

* USA is the same as Code Page 437.

** These are scalable and provided with upright, italic, and bold as resident fonts.

*** H-draft stands for high-speed draft.

√: Supported

Resident font		Courier 10	Elite 12	Compress	Draft	Bold PS	Pica 10	Courier scalable**	Timeless **	Nimbus Sans **	Correspondence	H-draft***	OCR-B	OCR-A
National character set	Name in setup menu													
Kamenicky	KAMENIC	√	√	√	√	√	√	√	√	√	√	√		
Kamenicky two-pass	KAMEN-T	√	√	√	√	√	√	√	√	√	√	√		
Turkish	TURKY	√	√	√	√	√	√	√	√	√	√	√		
Turkish two-pass	TURKY-T	√	√	√	√	√	√	√	√	√	√	√		
Cyrillic	CYRILIC	√	√	√	√			√	√	√				
IBM 437	IBM437	√	√	√	√			√	√	√		√		
IBM 851	IBM851	√	√	√	√			√	√	√		√		
ELOT 928	ELOT928	√	√	√	√							√		
Code Page DHN	PG-DHN	√	√	√	√	√	√				√	√		
Latin Polish	LATIN-P	√	√	√	√	√	√				√	√		
ISO Latin	ISO-LTN	√	√	√	√	√	√				√	√		
Lithuanian 1	LITHUA1	√	√	√	√									
Lithuanian 2	LITHUA2	√	√	√	√									
MIK	MIK	√	√	√	√			√	√	√				
Macedonian	MACEDON	√	√	√	√			√	√	√				
ABG	ABG	√	√	√	√			√	√	√				
ABY	ABY	√	√	√	√			√	√	√				
Code Page MAC	PG-MAC	√	√	√	√			√	√	√				
ELOT927	ELOT927	√	√	√	√			√	√	√				
DEC Greek	DEC GR	√	√	√	√			√	√	√				
Greek 11	GREEK 11	√	√	√	√			√	√	√				
Code Page 862	PG862	√	√	√	√	√	√							
Hebrew Old	HBR-OLD	√	√	√	√	√	√							
Hebrew DEC	HBR-DEC	√	√	√	√	√	√							
ISO-Turkish	ISO-TUK	√	√	√	√	√	√							

* USA is the same as Code Page 437.

** These are scalable and provided with upright, italic, and bold as resident fonts.

*** H-draft stands for high-speed draft.

√: Supported

F

RESIDENT FONTS

This appendix provides print samples of the printer's nineteen resident fonts.

COURIER 10	The 24-wire dot-matrix printer prints quality characters and symbols using a variety of sizes and fonts.
PRESTIGE ELITE 12	The 24-wire dot-matrix printer prints quality characters and symbols using a variety of sizes and fonts.
DRAFT 12	The 24-wire dot-matrix printer prints quality characters and symbols using a variety of sizes and fonts.
COMPRESSED	The 24-wire dot-matrix printer prints quality characters and symbols using a variety of sizes and fonts.
PICA 10	The 24-wire dot-matrix printer prints quality characters and symbols using a variety of sizes and fonts.
CORRESPONDENCE 10	The 24-wire dot-matrix printer prints quality characters and symbols using a variety of sizes and fonts.
HIGH-SPEED DRAFT 12	The 24-wire dot-matrix printer prints quality characters and symbols using a variety of sizes and fonts.
BOLDFACE PS	The 24-wire dot-matrix printer prints quality characters and symbols using a variety of sizes and fonts.
OCR-B 10	The 24-wire dot-matrix printer prints quality characters and symbols using a variety of sizes and fonts.
OCR-A 10	The 24-wire dot-matrix printer prints quality characters and symbols using a variety of sizes and fonts.

COURIER (SCALABLE)

Normal	The 24-wire dot-matrix printer prints quality characters and symbols using a variety of sizes and fonts.
Bold	**The 24-wire dot-matrix printer prints quality characters and symbols using a variety of sizes and fonts.**
Italic	*The 24-wire dot-matrix printer prints quality characters and symbols using a variety of sizes and fonts.*

NIMBUS SANS ® (SCALABLE)

Normal	The 24-wire dot-matrix printer prints quality characters and symbols using a variety of sizes and fonts.
Bold	**The 24-wire dot-matrix printer prints quality characters and symbols using a variety of sizes and fonts.**
Italic	*The 24-wire dot-matrix printer prints quality characters and symbols using a variety of sizes and fonts.*

TIMELESS (SCALABLE)

Normal	The 24-wire dot-matrix printer prints quality characters and symbols using a variety of sizes and fonts.
Bold	**The 24-wire dot-matrix printer prints quality characters and symbols using a variety of sizes and fonts.**
Italic	*The 24-wire dot-matrix printer prints quality characters and symbols using a variety of sizes and fonts.*

GLOSSARY OF TERMS

A4 size

A standard paper size used in Japan and other countries. Paper is 210 × 295 mm (8.25 × 11.6 inches).

Application software

Software programs that perform tasks on a computer. Such programs include word processing, database management, and accounting, for example.

ASCII

The acronym for American National Standard Code for Information Interchange. ASCII is a set of 256 codes (numbered 0 to 255) used to communicate information between a computer and another device such as a printer.

Baud rate

The speed, in bits per second, at which data is transmitted to a device such as a printer. Baud rates apply to serial data only. 1200 baud equals approximately 120 characters per second.

Bidirectional printing

Alternate printing of lines from left to right and right to left. Bidirectional printing is faster than unidirectional printing because there are no carriage returns.

Bit

The smallest unit of information in computer memory. A bit is a single digit, either a 1 or a 0, in the binary numbering system. Eight bits equal one byte.

Bottom feed

Paper feeding through a slot at the bottom of the printer. The forms tractor unit, which must be installed on the top of the printer, pulls paper through the printer. The desk or printer rack, on which the printer sits, must have also a paper feed slot.

Buffer

A storage area for data in the printer or computer. The printer's buffer consists of a print buffer and a download buffer. The print buffer holds data to be printed. The download buffer holds downloaded data such as download (soft) fonts.

Byte
A byte consists of eight bits that constitute one symbol. A byte represents a single character, such as number, letter, or special control character.

Carriage return (CR)
The return of the print head carriage to the beginning of the next line.

Centronics interface
A type of parallel interface. See Parallel interface.

Column
A vertical section on a printed page. M3389A/B can print 136-column pages and M3388A/B can print 80-column pages at 10-pitch (10 characters per inch).

Command set
A set of print and format commands used to control the printer. Each printer has its own resident command sets embedded in the printer firmware. These command sets are actuated by codes sent from the host computer.

Condensed print
Print that uses "condensed" characters. Condensed characters are narrower than regular characters. Using condensed print increases the number of characters per line.

Continuous forms
Connected, fan-folded sheets of paper that are fed into the printer using forms tractors. The fan-folded sheets are separated by tearing them at their perforations.

Control panel
A panel containing the printer indicators and buttons. The control panel is used to control printer operations, such as loading paper, selecting print features, and changing setup options.

cpi
Characters per horizontal inch. Also referred to as pitch. For example, 12-pitch means 12 cpi.

cps
Characters per second.

Cut sheets
See Single sheets.

Cut sheet feeder
An option that replaces the cut sheet stand. The cut sheet feeder allows automatic loading from a stack of paper.

Defaults Settings selected automatically by the printer when power is turned on. Enter setup mode to change the defaults to ensure compatibility with your system hardware and software.

Dot matrix The grid used to print characters on a dot matrix printer. Each dot corresponds to a wire in the print head.

Downloading Transferring soft fonts from the computer to the printer's memory. Downloading allows you to use fonts not resident in the computer.

dpi Dots per inch.

Emulation A command set that allows one printer to print like another printer. This printer has three resident emulations: Fujitsu DPL24C PLUS (native command set), IBM proprinter XL24E, and Epson ESC/P2.

Font A complete set of printable characters having the same size and style. For example, Courier 10 and Prestige Elite 12 are commonly used fonts.

Form feed (FF) A signal to the printer to advance the paper forward one page. Form feeds can be executed either by your software or by holding down the LF/FF button on the printer control panel.

Graphics printing Controlling the print head wires (dots) individually to produce a picture or an image on the page.

Hexadecimal A base-16 numbering system (also commonly referred to as hex numbers). Since a base-16 system requires 16 digits, numbers 0 through 9 and letters A through F are used. Expressing binary numbers in hexadecimal uses fewer digits.

Hex dump A hexadecimal printout of control codes and data. Hex dumps are used to debug computer programs and to troubleshoot printer malfunctions. To print a hex dump on the printer, use the HEX-DUMP function in setup mode.

Interface
A connection that allows communication from one part of a system to another. For example, electrical signals are transferred between the computer and printer over an interface cable.

K byte
Kilobyte. 1K byte equals 1024 bytes.

Letter size
A standard paper size used in the United States and other countries. Paper is 8-1/2 × 11 inches (215.9 × 279.4 mm).

Line feed (LF)
A signal to the printer that advances the paper forward one line. Line feeds can be executed either by your software or by pressing the LF/FF button on the printer control panel.

Line spacing
The vertical spacing between lines, measured in lines per inch.

lpi
Lines per inch. Used to measure line spacing.

Monospacing
Character spacing in which each printed character has the same width. Also called fixed pitch, monospacing is the opposite of proportional spacing. Typewriter or computer-printed text is typically monospaced.

Nonresident font
Fonts not present (resident) in the printer's permanent memory. Soft fonts and fonts on font cards are examples of nonresident fonts.

Normal mode
One of the printer's two operating modes. In normal mode, the control panel can be used to perform everyday printer operations, such as loading and unloading paper, feeding paper, and selecting print features. See also Setup mode.

Offline
When the printer is offline, it receives commands from the printer control panel rather than from the computer. "Offline" indicates that the printer is not "online" with the computer.

Online
When the printer is online, it is ready to receive or is receiving commands from the computer. The printer must be online to print.

Parallel interface

A standard computer interface. Information is transferred between devices over separate wires, allowing all of the bits that make up the character to be transmitted simultaneously (in parallel).

Park position

The position in which continuous forms paper is retracted or "parked" on the rear forms tractors. When continuous forms paper is loaded, it moves forward from the park position to the platen.

Permanent memory

Memory that retains information even when power is turned off. The printer's permanent memory retains the default settings specified using the printer setup mode.

Pitch

Characters per horizontal inch (cpi).

Platen

A hard rubber cylinder that moves paper forward during printing.

Proportional spacing

Character spacing in which wide characters occupy more space than do narrow characters. For example, characters such as "W" or "M"occupy more horizontal space than do characters such as "i" or "l." Many soft fonts are proportionally spaced. Sometimes designated PS, proportional spacing is the opposite of monospacing.

Protocol

A set of instructions that control how data is transmitted between devices such as a computer and printer.

Rear feed

In rear feed, paper is fed from the rear of the printer. The forms tractor unit must be installed at the rear of the printer. The forms tractor unit pushes paper into the printer.

Resident fonts

Fonts present (resident) in the printer's permanent memory. For this printer, the resident fonts are Courier 10, Prestige Elite 12, Pica 10, OCR-B 10, OSR-A 10, Boldface PS, Compressed font, Correspondence, Draft, and High-speed Draft. Unlike soft fonts, resident fonts can always be accessed.

RS-232C interface

A type of serial interface. See Serial interface.

Self-test

A test that determines whether the printer is working correctly. Test pages are printed to show print quality and verify whether all characters print. The self-test only tests the printer. It does not test how thecomputer works with the printer.

Separator

A printer cover that has bail rollers and the guide that leads paper outside the printer.

Serial interface

A standard computer interface. Information is transferred between devices over a single wire (although other wires are used for control). A serial interface can use an interface cable greater than 3 meters (10 feet). A long cable is often necessary in networking environments, where the printer may be shared.

Setup mode

One of the printer's two operating modes. In setup mode, the controlpanel can be used to select the printer default settings, such as print features, hardware options, and top-of-form. Setup mode also provides some diagnostic functions. See also Normal mode.

Shadow printing

Shadow printing prints characters twice for emphasis. Characters printed the second time are shifted slightly to the right.

Single sheets

Single sheets are sheets of paper, envelopes, and noncontinuous multipart forms fed into the printer using the cut sheet stand or optional cut sheet feeder. Single sheets are also called cut sheets.

Soft fonts

Fonts downloaded from a disk to the printer memory. Soft fonts are also referred to as downloaded fonts. Unlike resident fonts, soft fonts are available only when in the printer memory.

Software

Programs that control the computer and printer to perform specified tasks, such as word processing, database management, and preparation of spreadsheets. Software is sometimes referred to as application software.

Top margin

The total space at the top of the printed page. The top margin is the sum of the top-of-form setting, the software-specified top margin, and the printer's TOP-MRG setting.

Top-of-form (TOF)

The logical top of the physical page, as "understood" by the printer when loading paper. The default TOF settings are 1 inch (25.4 mm) for both cut sheets and continuous forms.

Tractor feed

A method for feeding continuous forms forward for printing. Holes on the sides of the forms fit over sprockets on two tractors located inside the printer. The forms are pulled for bottom feeding and pushed for rear feeding.

Unidirectional printing

Printing is performed in one direction only, left to right. Unidirectional printing is slower than bidirectional printing, but the vertical alignment is more accurate. Unidirectional printing is useful when precise vertical alignment is required, as in ruled tables.

INDEX

A

Adjustments
- left margin 3-6, 3-10, 3-15
- paper select lever 2-10, 3-3
- paper thickness lever 2-10, 3-3
- top-of-form 5-35

ACM (Alternate Graphics Mode) 5-24, 2-56
AREA OVER indicator 4-8
Area over detection 4-8, 2-41
ATTRIB 5-18
Attributes, font 5-18

B

Bidirectional printing 5-30
Bold face 5-15
BUFFER 5-30
Buffer size 5-30
Buttons
- FONT 4-2
- LF/FF 3-3, 4-2
- LOAD 3-3, 3-7, 3-12, 3-21
- LOCK 5-6
- MENU 4-2
- ONLINE 2-23, 5-7
- TEAR OFF 3-3, 3-22

BUZZER 5-30

C

Cables
- parallel (Centronics) 2-19, D-1
- serial (RS-232C) 2-19, D-6

Carriage return (CR) 5-26
- missing 7-3

Centronics (parallel) interface
- cable connection 2-20
- specifications D-1

Change ribbon cartridge 6-3
Character
- enlargement 5-17, 5-18
- height 5-18
- pitch 5-17
- sets 5-24, E-1
- width 5-17

CHART-H 5-18
CHAR-W 5-17
CHR-SET 5-23
Cleaning 6-1
Clear print buffer 4-10
COLOR 5-19
Color
- kit, installing 8-2
- ribbon 2-8, 6-5
- selecting 5-14, 5-19

Command sets, resident C-1
Compatible mode D-2
Compressed font 5-15
Condensed printing 5-18
Continuous forms
- loading 3-14
  - pull tractor 3-17
  - push tractor 3-14
- placement 3-13
- tearing off 3-22
- unloading 3-22

Control panel 2-10, 3-2, 4-2
Correspondence 5-15
Courier 10 5-15

CR-CODE 5-25
CSFTYPE 5-32
Cursor, on print guide 2-24, 5-4
Cut sheet feeder
  installing 8-1
  loading 3-8
Cut sheet stand
  installing 2-6
  loading 2-13, 3-5

D

DC1/DC3 commands 5-25
DC3-CDE 5-25
DEFAULT function 5-28, 2-46
Default settings
  factory defaults 5-11
    resetting 2-45
    resetting MENU1 and MENU2 2-45
  power-on defaults 5-1
    resetting 2-45
Demo pattern 2-18
Diagnostic functions 2-46, 7-11
Download buffer 5-30
Downloaded (soft) fonts 4-1, 5-16
DPL24C PLUS
  commands C-1
  factory defaults C-14
  selecting 2-21, 5-15
DRAFT 5-16
DTR protocol 5-32, D-10

E

Ejecting single sheets C-12, C-21, C-29
EMULATE 2-24, 5-12, 5-15
Emulations
  selecting 2-21, 5-12, 5-14
  supported 2-22
Entering setup mode 5-2
Envelope adapter 3-27, 8-1
Envelopes, using 3-27
Epson ESC/P2
  commands C-22
  selecting 2-21, 5-15
Exiting setup mode 2-43

F

Factory settings (defaults) 5-11, 2-45, C-14
Feeder type detection 3-8, 7-9
Feeding paper
  form feed 3-3, 3-23
  line feed 3-3, 3-23
  problems 7-4
FONT 4-5, 5-15
Fonts
  attributes 5-18
  indicators 4-5
  selecting 5-15
  types 1-2, F-1
Form feed 3-3, 3-23
Forms tractors 2-11, 3-14
Fujitsu DPPL24C PLUS
  selecting 2-21, 5-15
<<FUNCTION>> menu 5-3
Functions 5-12
  ADJUST 5-34
  CONFIG 5-38
  DEFAULT 5-27, 2-46
  HARDWARE 5-29
  HEX-DUMP 2-48, 7-11

LIST 5-10
MENU1 5-14
MENU2 5-14
purpose 5-4
SAVE&END 2-43
selecting 5-5
SELF-TST 2-47, 7-11
V-ALMNT 2-51, 7-11

G-H

Glossary of terms GL-1
Hardware (options)
in setup mode 5-29
installing 8-1
order numbers A-1
HARDWRE function 5-29
Help menus 5-4, 5-9
Help, where to get 7-11
HEX-DUMP function 2-47, 7-11
HI-DRFT 5-16

I

IBM Proprinter XL24E
commands C-17
selecting 2-21, 5-15
Installing
color kit 8-2
cut sheet feeder 8-1
cut sheet stand 2-6
interface cable 2-19
power cord 2-11
printer head 6-7
ribbon cartridge 2-7, 6-3
Italics 5-18
Items, setup
ADJUST 5-35
CONFIG 5-38
HARDWRE 5-29
MENU1 5-14
MENU2 5-14

L

Labels, using 3-28
LANGUGE 5-21
Lever
bin 3-9
paper select 3-2
paper thickness 3-2, 3-4
tractor locking 3-15
LF/FF button 3-2, 4-2
LF-CODE 5-26
LFT-END 5-20
Line feed 3-3,3-23
LINE SP 5-17
Line spacing 5-17
LIST function 5-10
LOAD button 3-3, 3-7, 3-12, 3-21
Loading
continuous forms 3-14
pull tractor 3-17
push tractor 3-14
cut sheet feeder 3-8
single sheets 3-5
Lubrication, printer 6-1
LOCK 5-41
LOCK button 5-6, 5-7

M

Maintenance, printer 6-1

Margins
checking 3-7, 3-12, 3-17, 3-21
left 5-20
top 5-20
MENU1 function 5-14
MENU1 and MENU2
changing options (setup mode) 5-14
on control panel 4-2
switching between 4-3
MENU2 function 5-14
Menu, <<FUNCTION>> 2-24, 5-4
MENU 4-3, 5-12
Multipart paper 3-26, B-8

N

National character sets
all emulations E-4
DPL24C PLUS/IBM XL24E E-12
ESC/P2 ..... E-13
Nibble mode D-4
Number of copies 3-1, B-3

O

ONLINE
button 2-25, 5-7
indicator 2-12
Online setup 2-58
ON-LOAD 5-41
Options, hardware 1-3
installing 8-1
order numbers A-1
Options, setup
adjustment 5-34
configuration 5-38
currently selected 5-10
hardware 5-29
MENU1 5-14
MENU2 5-14
required 5-12

P

Page
length 3-1, 5-19
width 3-1, 5-25
PAGE LG 5-19
Paper
continuous forms 3-14, 3-17
ejecting single sheets 3-12
feeding 3-23
guides 3-6, 3-10
loading 3-5, 3-8, 3-14, 3-17
operations 3-2
print areas B-6
selection 3-1, B-6
select lever 3-2
single sheets 3-6
size and thickness 3-1, B-6
specifications 3-1, B-6
thickness lever 3-4
tips for handling 3-26
types, switching 3-24
unloading forms 3-22
Paper-out detection 4-7, 5-29
PAPER OUT indicator 2-12, 3-25, 4-6
Paper-out sensor 3-10, 7-4
Paper path
selecting 3-3
switching 3-23
Parallel (Centronics) interface
cable connection 2-20

specifications D-1
Perforation skip 5-23
Pica 10 5-15
PITCH 5-17
Pitch, selecting in setup mode 5-17
Platen 2-10
cleaning 6-3
knob 2-10
Power
connector 2-11
cord 2-3, 2-11
switch 2-10
Power-on defaults 2-45
PPR-OUT 5-29
Prestige Elite 12 5-15
PRF-SKIP 5-24
Print
areas B-6
buffer, clearing 4-10, 5-30
features, selecting 4-1
list of selected options 5-10
Print head 2-9, 2-10
Printer
control panel 2-10, 3-2, 4-2
failures 7-10
features 1-1
location 2-1
normal mode QR-1, 5-1
options 1-3, 8-1
parts 2-10
performance B-4
problems 7-1
setup 2-1
setup mode 5-1
specifications B-1
Printing
currently selected options 5-10
demo pattern 2-18
in hexadecimal 2-48
problems 7-2
self-test 2-14, 2-47
start 4-6
stop 4-6
using control panel 4-2
using software 4-2
with parallel interface 2-25
with serial interface 2-25
Problems
operating 7-8
paper handling 7-4
power 7-8
printer failures 7-10
printing 7-1
solving 7-1
Protocols, serial 5-33, D-10
PRT-DIR 5-30

Q

QUALITY 5-16
Quick Reference, operation QR-1

R

Rating label 2-11, 7-11
RC protocol D-10
Removing printed pages 4-9
Replacing ribbon 6-3
Reset defaults 2-45
Resident
command sets C-1
emulations 2-21, 5-15
fonts 1-2, 4-5, F-1
Resident Fonts F-1

Index

Resume printing 4-7
RGHTEND 5-26
Ribbon cartridge
installing 2-7
replacing 6-3
Ribbon subcassette 6-3, A-1
RS-232C (serial) interface
cable connection 2-20
optional settings (setup) 2-26, 5-31
specifications D-6

S

SAVE&END function 2-43
Saving settings 5-8, 2-43
Select (DC1)/Deselect (DC3)
commands 5-25
Self-test, printer 2-14, 2-48
SELF-TST function 2-48
Serial (RS-232C) interface
cable connection 2-20
optional settings (setup) 2-26, 5-31
specifications D-6
Setup mode
changing configuration options 5-38
changing hardware options 5-29
changing MENU1 and 2 options 5-14
changing print position
adjustment options 5-34
DPL24C PLUS flowchart 2-54
entering 5-2
example 5-6
exiting 2-43
online 2-58
overview of 5-4
saving settings 2-43
summary of buttons 5-7
Setup options
adjustment options 5-34
Alternate Graphics Mode (AGM) 5-24
area over detection (AREACNT) 2-41
attributes (ATTRIB) 5-18
autoload start time (LOADTIM) 2-40
buffer (BUFFER) 5-30
buzzer ON/OFF (BUZZER) 5-30
carriage return (CR) 5-25
character height (CHAR-H) 5-18
character set (CHR-SET) 5-24
character width (CHAR-W) 5-17
color (COLOR) 5-19
configuration options 5-38
command decode timing (DECODE) .. 2-40
complete listing 5-10
continuous forms
fine adjust (CNTFINE) 5-35
continous forms
top-of-form (CNT-LFT) 5-36
continuous forms
left print position (CNT-ORG) 5-35
cut sheet feeder type (CSFTYPE) 5-32
Cut Sheet Selection
command (//S//) 5-41
emulation (EMULATE) 5-15
fonts (FONT) 5-15
hardware options 5-29
interface (INTRFCE) 5-31
language (LANGUGE) 5-21
left end of page (LFT-END) 5-20
line feed (LF) 5-26
line spacing (LINE SP) 5-17
lock function of setup mode (LOCK) .. 5-41
MENU1 and MENU2 options 5-14
page length (PAGE LG) 5-19
page width (WIDTH) 5-25
paper-out response (PPR-OUT) 5-29

perforation skip (PRF-SKIP) 5-24
pitch 5-17
print direction (PRT-DIR) 5-30
print options 5-16
print quality 5-16
right end of page (RGHTEND) 5-26
Select/Deselect commands
(DC3-CDE) 5-25
serial options 5-31
single sheet autoload (CUTLOAD) 2-40
single sheet fine adjust (CUTFINE) 5-35
single sheet left
print position (CUT-LFT) 5-36
single sheet
line spacing adjust (CUT-ADJ) 5-36
single sheet top-of-form (CUT-ORG) 5-35
status after loading paper
in offline mode (ON-LOAD) 5-41
tear-off (TEAROFF) 5-38
tear-off enable time (TEAR-EN) 5-39
tear-off position (TEARPOS) 5-39
top margin (TOP-MRG) 5-20
top-of-form 5-34
word length (WORD-LG) 5-30
zero with a slash (ZEROFNT) 5-25
Shadow printing 5-18
Shipping restraint 2-4
Single sheets
ejecting 3-12
loading 3-5, 3-8
Soft (downloaded) fonts 4-1, 5-16
Software, using 2-25, 4-2
Specifications
interface D-1
paper B-6
printer B-1
Supplies A-1
Switching
MENU1 and MENU2 4-5
menu font and resident font 4-3
paper types 3-24

T

Tearing off forms 3-20
Tear-off setup options 5-38
Testing printer
offline 2-13, 2-47
online 2-25
Top margin, changing 2-14, 5-20
TOP-MRG 5-20
Top-of-form, changing 5-34

U-Z, Others

Unidirectional printing 5-30
Unpacking 2-3
V-ALMNT function 2-51, 7-11
Vertical character displacement
correcting 2-51, 7-11
WIDTH 5-25
Word length 5-30
WORD-LG 5-30
XON/XOFF protocol 2-26, 5-31, D-10
ZEROFNT 5-25
//S// 5-41

FUJITSU OFFICES

Please send your comments on this manual or on Fujitsu products to the following addresses (arranged alphabetically):

FUJITSU AUSTRALIA LIMITED
475 Victoria Avenue, Chatswood
N.S.W., 2067, AUSTRALIA
TEL: (61-2) 410-4555
FAX: (61-2) 411-8603

FUJITSU CANADA INC.
2800 Matheson Boulevard East
Mississauga, Ontario L4W 4X5, CANADA
TEL: (1-905) 602-5454
FAX: (1-905) 602-5457

FUJITSU COMPUTER PRODUCTS OF AMERICA, INC.
2904 Orchard Parkway, San Jose
CA 95134-2022, U.S.A.
TEL: (1-408) 432-6333
FAX: (1-408) 894-1709

FUJITSU DEUTSCHLAND GmbH.
Frankfurter Ring 211
80807 München, GERMANY
TEL: (49-89) 32378-0
FAX: (49-89) 32378-100

FUJITSU ESPAÑA, S.A.
Almagro 40, 28009 Madrid, SPAIN
TEL: (34-1) 581-8400
FAX: (34-1) 581-8125

FUJITSU EUROPE LTD.
2 Longwalk Road, Stockly Park, Uxbridge
Middlesex UB11 1AB, ENGLAND
TEL: (44-81) 573-4444
FAX: (44-81) 573-2643

FUJITSU FRANCE S.A.
1, place des Etats-Unis Silic 310
94588 RUNGIS Cedex, FRANCE
TEL: (33-1) 41-80-38-80
FAX: (33-1) 41-80-38-66

FUJITSU HONG KONG LIMITED
Room 2521, Sun Hung Kai Centre
30 Harbour Road, HONG KONG
TEL: (852) 827-5780
FAX: (852) 827-4724

FUJITSU ICIM LTD.
Nagar Road, Pune 411 014, INDIA
TEL: (91-212) 681-528
FAX: (91-212) 680-238

FUJITSU ITALIA S.p.A.
Via Nazario Sauro, 38
20099 Sesto S. Giovanni (MI), ITALY
TEL: (39-2) 26294-1
FAX: (39-2) 26294-201

FUJITSU KOREA LTD.
9th Floor, Korean Reinsurance Bldg.
80, Susong-Dong, Chongro-Gu
Seoul Special City, KOREA
TEL: (82-2) 739-3281
FAX: (82-2) 739-3294

FUJITSU NORDIC AB
Kung Hans Väg 12
S-191 76 Sollentuna, SWEDEN
TEL: (46-8) 626-6000
FAX: (46-8) 626-6711

FUJITSU (SINGAPORE) PTE. LTD.
75 Science Park Drive
#02 06 CINTECH II, SINGAPORE 0511
TEL: (65) 777-6577
FAX: (65) 777-8794

FUJITSU SYSTEMS BUSINESS (MALAYSIA) SDN. BHD.
Fujitsu Plaza, 1A, Jalan Tandang 204
P.O. Box 636 Pejabat Pos Jalan Sultan
46770 Petaling Jaya
Selangor Darul Ehsan, MALAYSIA
TEL: (60-3) 793-3888
FAX: (60-3) 793-0888

FUJITSU SYSTEMS BUSINESS (THAILAND) LTD.
12th Floor, Olympia Thai Tower
444 Rachadapisek Road, Samsennok
Huaykwang, Bangkok 10310, THAILAND
TEL: (662) 512-6066
FAX: (662) 512-6068

FUJITSU TAIWAN LTD.
8th FL., NO. 170, Hung Tai Center
Tun Hwa N. RD., Taipei, TAIWAN
TEL: (886-2) 545-7700
FAX: (886-2) 717-4644

FUJITSU LIMITED
Computer Products Business Group
Kamikodanaka 4-1-1, Nakahara-ku
Kawasaki-shi 211, JAPAN
TEL: (81-44) 754-8633
FAX: (81-44) 754-8510

FUJITSU